USER MANUAL

OFF-ROAD CRAWLER

NO.EX86150

ROCK CRAWLER

Notes:

- Read and understand the instructions carefully before operating or assembling your racing model.
- Specifications are subject to change without prior notice, and actual received model may vary from the images and/or descriptions in this manual.

The product has conducted IQC (Input Quality Control) and full inspection before delivery. The manufacturer is responsible for quality assurance. Remote Control model is assembled manually, and then there may have some defects in the production process. Once the product is modified or incorrect operation, it cannot apply for replacement and return services, for the parts and accessories may be damaged. Please contact the retail seller for after-sales service when needed.

The product conforms to technical requirements of export safety regulations.

Please read and follow all the instructions in the manual before use.

MADE IN CHINA

Factory Address: Huang Jiang Town, Dong Guan City,Guang Dong Province, China

Production Date: refer to packing instruction

ROHS

Introduction

We would like to welcome you to the world of remote control cars. What are RC cars? The simple answer is that they are radio controlled cars that respond precisely to your command. The more complete answer is that they can be a great addition to your lifestyle. RC car building and racing teach valuable mechanical and electrical skills, promote teamwork and encourage racers to test their skills with other racers from around the world. Whether you are just having fun racing your car in your backyard or racing at the world competition contest, radio controlled car racing is a great hobby.

We has been making RC products aimed at making our hobby fun and exciting with an affordable price. We are confident that your experience with our products will be positive. Of all the radio controlled models out there, no question about it, RC cars are the hardest to operate. This user manual covers a wide range of topics from nitro powered remote control cars to electrical powered remote control cars. We highly recommend that you read this user manual throughly and carefully before assembling and operating. Please follow all precautions and recommendations located within the manual. Be sure to retain the manual for future reference, routine maintenance, and tuning.

This product is not a toy. It is not recommended for children under 14 years old and any minor should be accompanied by an adult when operating. This product is a precision machine that requires proper assembly and setup to avoid accidents. Failure to take caution when operating this product may result in serious injury or property damage. It is the owner's responsibility to operate this product in a safe manner. Manufacturer and its distributors are not responsible in any way for any and all bodily injury(s) and/or property damage that may occur from the use of or caused by in any way or this product.

Warnings

● The product is not intended for those under 14 years of age without proper adult supervision. The product is not a toy. It is a precision machine requiring proper assembly and setup to avoid accidents and it is the responsibility of the owner to operate this product in a safe manner as it can cause serious personal injury and damage to property due to carelessness or misuse.

● Do not attempt to disassemble or modify any of the product components without the assistance of an experienced RC user.

● Only use the correct type of battery to operate. Using any wrong type of battery will damage the product and possibly make it dangerous to operate.

● The motor(s) may get hot during use. Always allow 10-15 minutes between each operation for the motor to cool down. This will prolong the life of your product.

● Choose an appropriate operating site consisting of flat, smooth ground, and clear open field. Do not operate near buildings, high voltage cable lines, or trees to ensure safety operation. Operate in safe area only, away from other people. RC models are prone to accidents, failures, and crashes due to a variety of reasons including, lack of maintenance, user error, and radio interference. Users are responsible for their actions and damage or injury occurring during the operation.

● Do not operate in inclement weather, such as rain, wind, snow or darkness.

● The product is composed of precision electrical components. It is critical to keep the product away from moisture and other contaminants. Do not allow them to get wet. Electrical damage may occur that could affect safe operation.

● You should complete a successful pre-run check of your radio equipment and model prior to each run.

● Use replacement parts from the original manufacturer to ensure safe operation.

● Operate this product within your ability. Do not operate under tired condition

● After each use, always allow the battery to cool down before recharging. When charging the battery pack, do not overcharge! If batteries get hot during charging, discontinue charging immediately and disconnect the battery from the charger. Never leave battery unattended while charging. If you are unsure of how to charge this battery, please seek the advice of experienced RC users. Never let children charge the battery without adult supervision.

● Always turn on the transmitter before connecting the battery on the model. When turning off the model, always disconnect the battery first, and then turn off the transmitter. If the order is reversed, the model may become uncontrollable and cause serious damage.

● If you are in doubt of your ability to operate the model, we strongly recommend that you seek assistance from experienced RC users or join your local modeling club to gain the required knowledge and skill. As the manufacturer and distributor, we assume no liability for the use of this product.

● Before turning on your model and transmitter, please check to make sure no one else is operating under the same frequency. Frequency interference can cause your model, or other's models to crash. The guidance provided by experienced RC users will be valuable for the assembly, tuning, trimming, and actual first flight.

● Never allow batteries to run low or you might lose control of the model.

● Plastic is very susceptible to damage or deformation due to extreme heat and cold climate. Do not store the model near any source of heat such as oven or heater. Store the model indoors, in a climate-controlled, room temperature environment.

● Never shorten the receiver antenna; or this might affect the transmitting range of the radio system.

● This product is a RC hobby model, do not use for other purpose.

Safety

Pay close attention to the following symbols and their meanings. Failure to follow these warnings could cause damage, injury or death.

Danger	Not following these instructions may lead to serious injuries or death.
Warning	Not following these instructions may lead to major injuries.
Attention	Not following these instructions may lead to minor injuries.

Prohibited	■ Do not use the product at night or in bad weather like rain or thunderstorm. It can cause erratic operation or loss of control. ■ Do not use the product when visibility is limited. ■ Do not use the product on rain or snow days. Any exposure to moisture (water or snow) may cause erratic operation or loss of control. ■ Interference may cause loss of control. To ensure the safety of you and others, do not operate in the following places: ● Near any site where other radio control activity may occur ● Near power lines or communication broadcasting antennas ● Near people or roads ● On any body of water when passenger boats are present ■ Do not use this product when you are tired, uncomfortable, or under the infuence of alcohol or drugs. Doing so may cause serious injury to yourself or others. ■ The 2.4GHz radio band is limited to line of sight. Always keep your model in sight as a large object can block the RF signal and lead to loss of control. ■ Do not touch any part of the model that may generate heat during operation, or immediately after use. The engine, motor or speed control, may be very hot and can cause serious burns.
Mandatory	■ Misuse of this product may lead to serious injury or death. To ensure the safety of you and your equipment, read this manual and follow the instructions. ■ Make sure the product is properly installed in your model. Failure to do so may result in serious injury. ■ Make sure to disconnect the receiver battery before turning of the transmitter. Failure to do so may lead to unintended operation and cause an accident. ■ Ensurethatallmotorsoperateinthecorrectdirection.Ifnot,adjustthedirection first. ■ Makesurethemodelstayswithinthesystemsmaximumrangetopreventlossof control.

Thanks for purchasing our RC car. The power system for RC model can be very dangerous, so please read this manual carefully. In that we have no control over the correct use, installation, application, or maintenance of our products, no liability shall be assumed nor accepted for any damages, losses or costs resulting from the use of the product. Any claims arising from the operating, failure of malfunctioning etc. will be denied. We assume no liability for personal injury, consequential damages resulting from our product or our workmanship.

START GUIDE

1. Please read the manual carefully and prepare the following things before use.

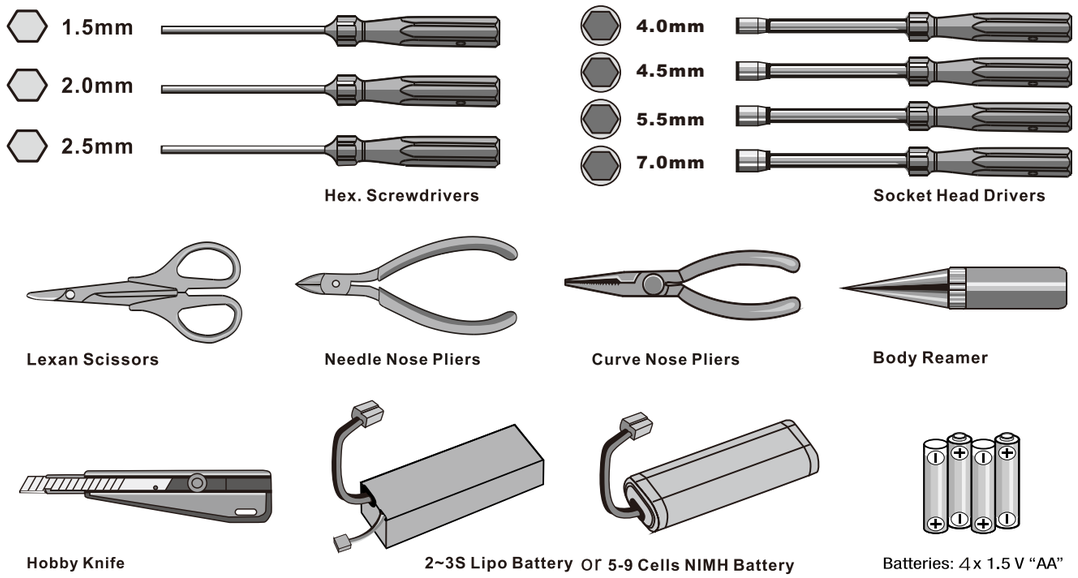

2.The items inside the box.

3. Please check the whole product condition when open the package.

3-1. After each day of running, you should check your shocks for adequate fluid. If the fluid is low, or it is getting dirty, you should change the fluid in the shocks. To achieve better performance, you may also want to change the shock fluid and or the pistons.

3-2. Gear mesh is the clearance between the pinion and spur in an electric car or clutch bell and spur in a nitro car. It has impact on the vehicles performance. If the gear mesh is not set properly you may also damage the clutch bell and spur or the pinion gear and spur gear as soon as the vehicle starts running.

3-3. Please check if the screw is tight enough before use. Screw it tight (or apply the screw glue if necessary)

3-4. Reguarly check and verify he tires are intact . No breach should be observed. Please apply the CA glue if needed.

4-1.Install Charged Batteries In Car.

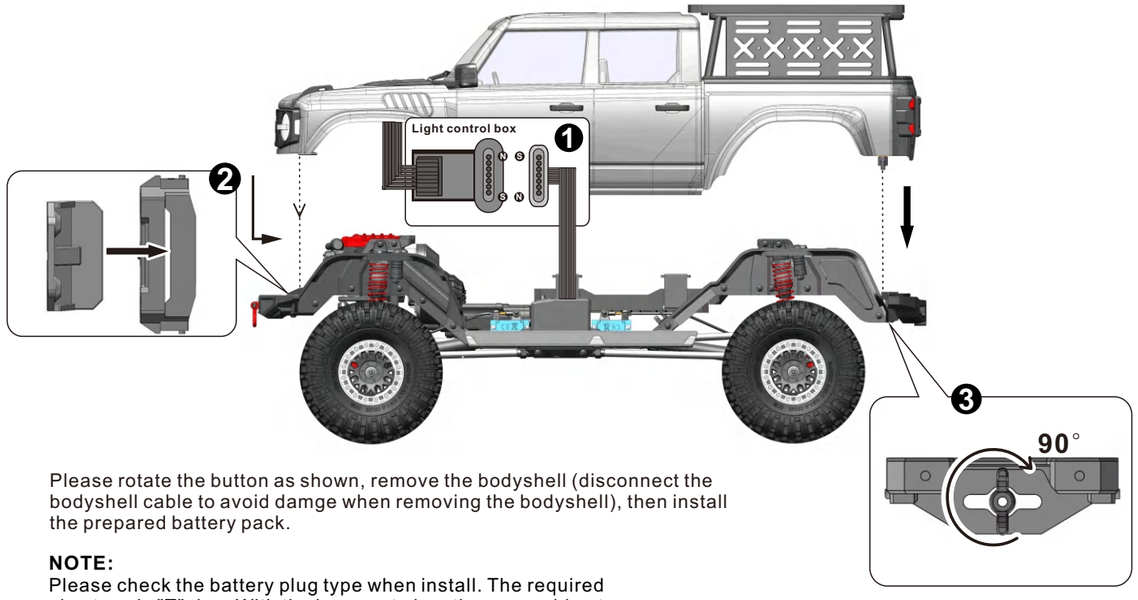

Please rotate the button as shown, remove the bodyshell (disconnect the bodyshell cable to avoid damge when removing the bodyshell), then install the prepared battery pack.

NOTE:
Please check the battery plug type when install. The required plug type is "T"plug. With the incorrect plug, the car could not run.

4-2.Scheme of installation

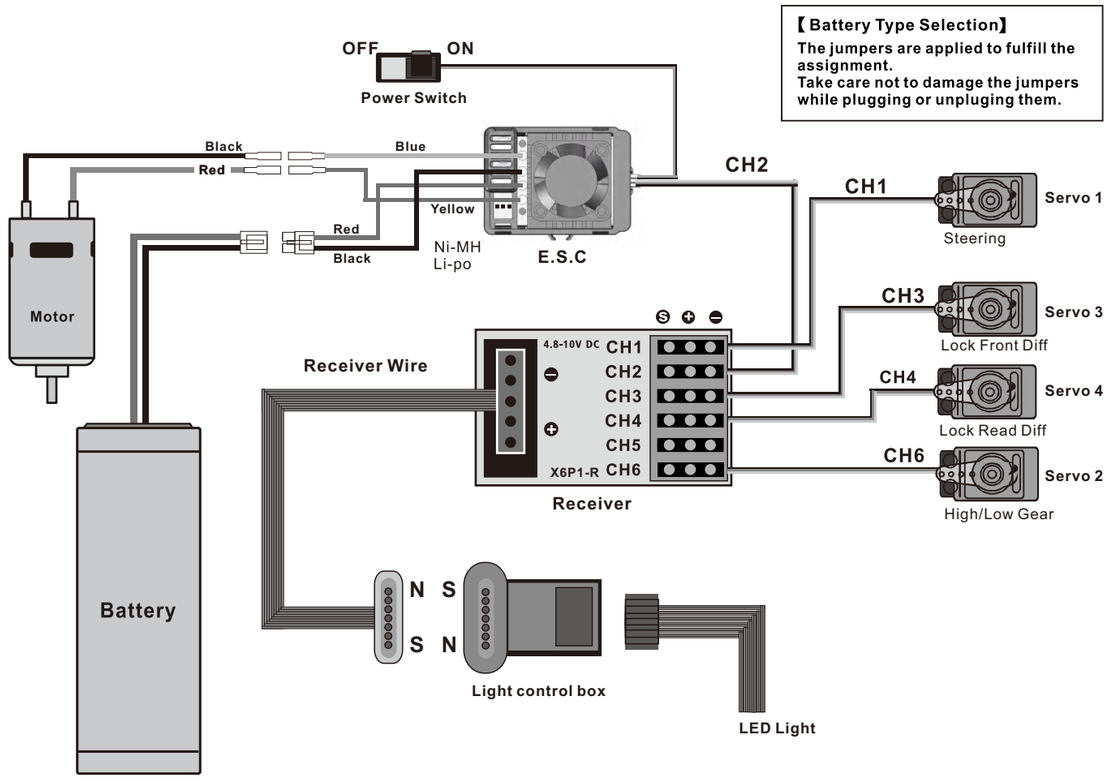

4-3. Battery Specifications for Product

WARNING:
NO battery includes in factory.Recommend?battery: 2S~3S LIPO battery or 5-9 cells NIMH battery (please match the ESC mode with the corresponding battery type)Pay attention to the battery size and plug specification when purchasing.The maximum battery measurement is 142*48*55mmJLxWxH).

This product can use the 2S or 3S Li-Po battery.

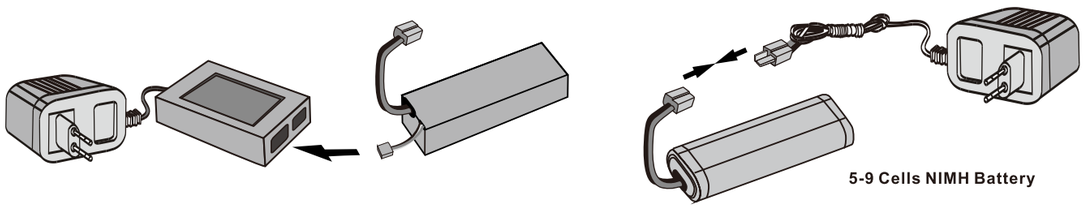

NOTICE
Please check the battery voltage before use. Please use a qualified charger to charge the newly purchased battery. (please read the charging steps in manual when necessary)

Charge the vehicle battery

- **Connect charger plug with mains jack and then connect with connector of battery.**
- **Please be care of safety while charging, please remove charger plug from the mains jack once finish charging. Will be over heat if it is too long to be charging or incorrect charging way. must stop charging if over 45 degree for the battery temperature.**
- **Do not charge for battery at once when you take it away from your car. Please make sure battery in cool condition before recharge battery to keep battery performance running well and get a longer use life.**

NiMH Battery Instructions

- Never dispose of NiMH batteries in a fire or store near sources of heat.
- Only use the supplied NiMH charger to charge the NiMH battery. Using another charger may permanently damage the battery and surrounding components and may also lead to injury.
- Batteries should only be charged on a fireproof surface, away from any flam-mable materials.
- Never leave the battery unattended when charging or discharging.
- Batteries must be discharged or fully exhausted before being disposed of. Cover exposed poles with adhesive tape to prevent short-circuiting!
- Never disassemble or alter the battery contacts. Do not damage or puncture battery cells. Doing so would result in an explosion hazard!
- Keep the NiMH battery away from children.

Lithium Polymer (LiPo) Battery Warnings

- Never charge a lithium polymer battery with a charger designed for NiCd, NiMH, or any other type of battery chemistry. Use ONLY charger designed for LiPo battery.
- Do not leave LiPo battery unattended during charging.
- Do not overcharge the battery.
- Always place the battery on a heat resistant surface alone when charging.
- Always put the LiPo battery inside a charging protection coatner while charging.
- Do not allow LiPo cells to overheat at any time. Cells which reach greater than 140 Fahrenheit (60C) will usually become damaged and will catch fire.
- Do not charge LiPo cells on or near combustible materials including paper, plastic, carpets, vinyl, leather, and wood. inside an R/C model or full size automobile.
- Do not discharge LiPo; doing so will damage the battery.
- Do not expose LiPo cell to water or moisture at any time.
- Do not store battery near open flame or heater.
- Do not assemble LiPo cells or pre-assembled packs together with other LiPo cells or packs.
- Always store LiPo battery in a secure location away from children.
- Always remove the LiPo battery if model is involved in any kind of crash. Carefully inspect the battery and connectors for even the smallest damage. CAUTION: cells may be hot!
- Do not allow the electrolyte to get into eyes or on skin. Wash affected areas immediately if they come into contact with electrolyte. Do not alter or modify connectors or wires of a LiPo battery pack.
- Always inspect the condition of the battery before charging and operating.
- Do not short circuit the LiPo battery.
- Do not have contact with a leaky/damaged battery directly.
- Do not charge battery out of recommended temperature range (0C - 45C).

5-1. 2.4GHZ Radio System

Batteries: 4 x 1.5 V "AA" (not included)

Install The Transmitter Batteries

Battery Installation:

1. Open the battery compartment cover.
2. Insert 4 AA fully charged batteries or 2S Li-Po batteries in correct polarity. (No response if battery polarity reversed.)
3. Close battery compartment cover.

Binding Process:

1.Press receiver button, LED indicator fast flas hing means entering into binding mode, the receiver will automatically looking for the nearest transmitter signal.

2.The indicator will always ON after successful bond.

5-2. Transmitter Steering Trim and Throttle Trim

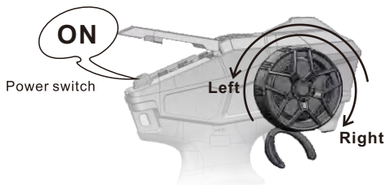

1.Move the control wheel to the left, vehicle turns left.

2.Do not move the control wheel, the front wheels are aligned and the vehicle goes straight in line.

3.Move the control wheel to the right, vehicle turns right.

Note
Place the hehicle on the stand with four wheels off ground as shown.

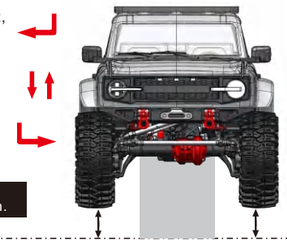

Wheel Angle
the maximum rotation of the Steering wheel is 35 degrees From center to left or right
Throttle trigger,
has a total throw of 12 degrees, 12.5 degrees forward, and 12.5 degrees backward

The heavier you pull or push the trigger, the faster acceleration will be.

Note: Release the throttle trigger button, activate the brake mode automatically. (Only for Crawler)

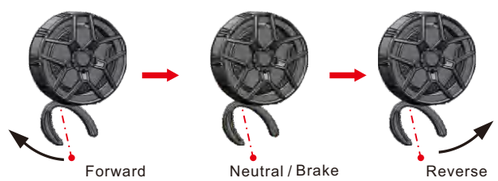

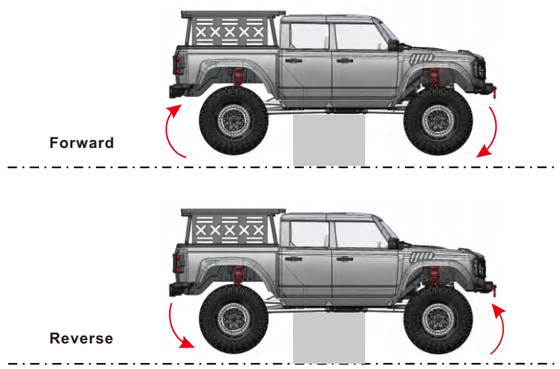

5-3. Transmitter Steering and Throttle Instruction

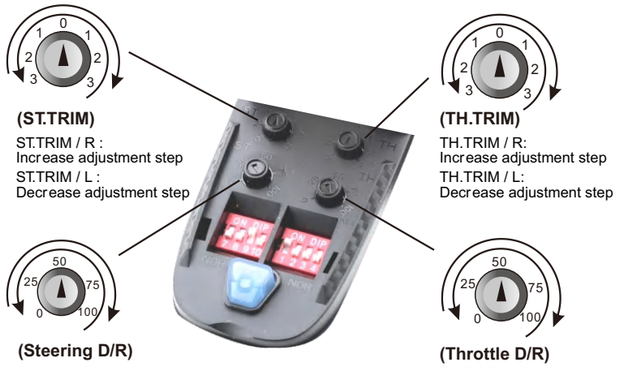

(ST.TRIM)

ST.TRIM / R :
Increase adjustment step
ST.TRIM / L :
Decrease adjustment step

(TH.TRIM)

TH.TRIM / R:
Increase adjustment step
TH.TRIM / L:
Decrease adjustment step

(Steering D/R)

ST.D / R +: increase servo travel.
ST.D / R -: decrease servo travel.

(Throttle D/R)

TH.D / R +: increase throttle travel.
TH.D / R -: decrease throttle travel.

Note:

- Please trim the Throttle Trim (TH. Trim) until the vehicle stops in case the vehicle goes forwards or backwards itself just after it is turned on.
- If the front wheels are not aligned,please trim"steering trim" (ST.TRIM) until they are aligned.
- The ST.TRIM is the trims for Ch1(steering),You can trim the Steering Trim until it fulfills your desired steering angles.
- ST.D / Ris for servo travel adjustment,which can be multiplexed as CH2 (throttle).

ST.REV

- Steering Trim(ST. Rev) is used to reverse the direciton of servo movement.
- The ST.REV switches are the reverse buttons for Ch1. If the switch is up it indicates reverse, and the down Indicates normal.

CH1

- Vehicle turning left when the control wheel is turned to the left (Steering Rev. At Normal position)
- Vehicle turning right when the control wheel is turned to the right (Steering Rev. at Reverse position)

Channel Reverse

TH.REV

- The Throttle Rev. is used to reverse the direction of motor rotation.
- The TH.REV switches are the reverse buttons for CH2. If the switch is up it indicates reverse, and the down indicates normal.

CH2

Vehicle going forward
(Throttle Rev. at Normal position)

Forward

Vehicle going backwards
(Throttle Rev. at Reverse position)

Reverse

5-4. Operating the Lock Differentials

The switch on top of the transmitter operates CH5/CH6 the front and rear differential locking mechanism. The differentials can be locked or unlocked at any time during most driving conditions. If the model is stuck and there is wheelspin on a single wheel (one side of an unlocked differential is freewheeling), then release the throttle and allow the wheels to stop before locking the differential. Apply throttle slowly until the differentials fully engage or disengage.

The front and rear diff lock is locked in factory. Ensure the vehicle in static or slow driving to avoid gear sweeping when conversion operation on the front and rear diff lock.

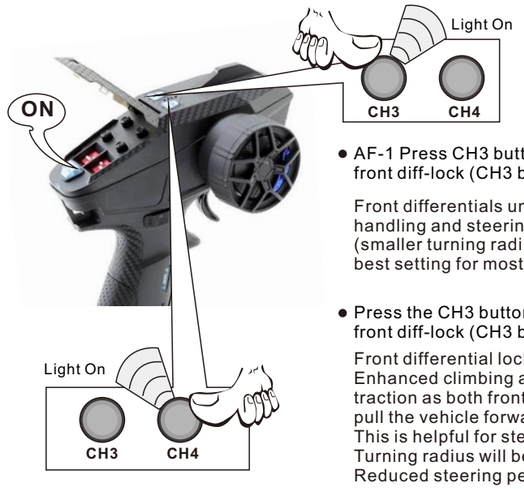

- AF-1 Press CH3 button, unlock the front diff-lock (CH3 button is on.)

  Front differentials unlocked. Best handling and steering performance (smaller turning radius). This is the best setting for most of your driving.

- Press the CH3 button again, lock the front diff-lock (CH3 button is off.)

  Front differential locked.
  Enhanced climbing ability and traction as both front tires work to pull the vehicle forward.
  This is helpful for steep inclines.
  Turning radius will be decreased.
  Reduced steering performance.

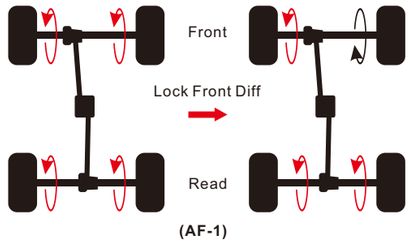

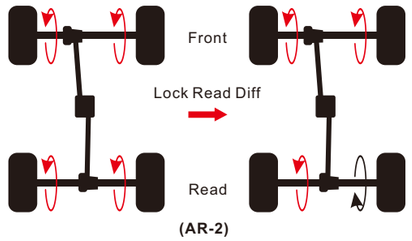

- AR-2 Press CH4 button, unlock the rear diff-lock (CH4 button is on.)
- Press the CH4 button again, lock the rear diff-lock (CH4 button is off.)
- AB-3 Press CH3 and CH4, unlock the front and rear diff-lock. (the button is on)
- Press CH3 and CH4 again, lock the front and rear diff-lock. (the button is off)

  Both differentials locked. Maximum climbing ability and traction. Reduced steering performance. On surfaces with good traction, it is normal for the truck to appear to alternately bind and slip the tires when attempting tight turns with the differentials fully locked.

  Locked differentials can be used at any time, but unlocking the differentials greatly improves vehicle handling during high-speed driving

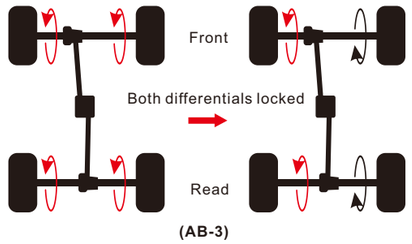

5-5. Shifting the High-Low Transmission

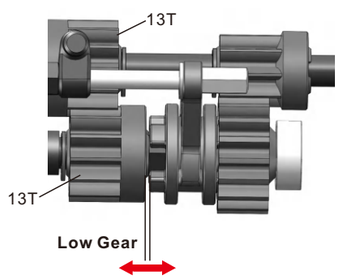

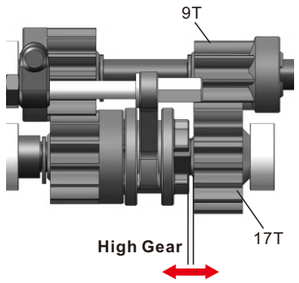

- Press CH6 button, the button light is on, switch to high-speed gear
- Press CH6 button again, the button light is off, switch to low-speed gear

Please stop or slow down the vehicle when shifting gear, from low-speed to high-speed or from high-speed to low-speed, in order to make the shift operation more smoother and protect the gear.

5-6. Light Control Usage

(5-A)

Model II :
As shown in image(5-A), press the button, the front headlights are on; press the button again, the front headlights are flashing; press the button once again, the front headlights are off.

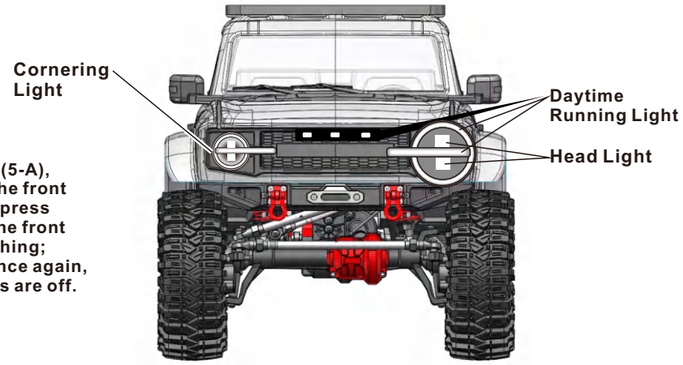

(5-B)

Model III :
As shown in image(5-B), press the button, DRLs areon; press the button again,DRLs are flashing; press the button once again, DRLs are off.

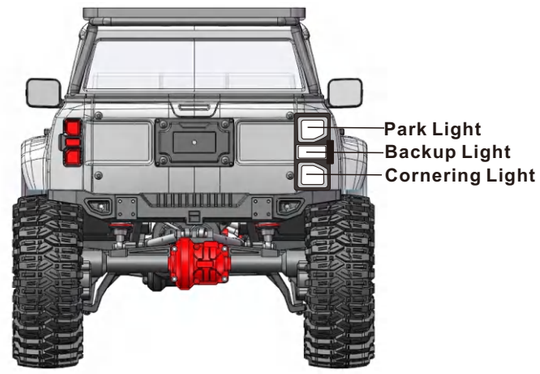

6. WP-880-Dual Brushed RTR

Model	WP-880-Dual Brushed RTR
Cont./Peak Current	80A/400A
Motor Type	Brushed Motor (540/550/775 size motors)
Applications	1/10th & 1/8th On-roads/ Buggies/Trucks/Monster Trucks/Rock Crawlers & Some Boats
Motor Limit	Brushed Motor Limit with 2S LiPo/6S NiMH: ≥12T or RPM<30000@7.4V (540/550 size motors) Brushed Motor Limit with 3S LiPo/9S NiMH: ≥18T or RPM<20000@7.4V (540/550 size motors) Brushed Motor Limit with 4S LiPo/12S NiMH: ≥24T or RPM<15000@7.4V (540/550 size motors)
LiPo/NiMH Cells	2-4S LiPo or 5-12S NiMH
BEC Output	7.4V@4A (Switch-mode)
Size/Weight (w./ Wires)	45.9mm(L)*34.7mm(W)*26.5mm(H)/ 75g
Programming Port	45.9mm(L)*34.7mm(W)*26.5mm(H)/ 75g

6-1. Programmable Items

Those "White text with Black background" options are the factory default settings

Programmable Items	Option 1	Option 2	Option 3	Option 4	Option 5	Option 6	Option 7	Option 8	Option 9
Running Mode	Fwd/Brk	Fwd/Rev /Brk	Fwd/Rev						
Battery Type	LiPo	NiMH							
Cutoff Voltage	Disabled	Auto(Low)	Auto (Medium)	Auto (High)					
Initial Start Force	0%	2%	4%	6%	8%	10%	12%	14%	16%
Max. Forward Force	25%	50%	75%	100%					
Max. Reverse Force	25%	50%	75%	100%					
Max. Brake Force	0%	12.5%	25%	37.5%	50%	62.5%	75%	87.5%	100%
Initial Brake Force	0%	6.25%	12.5%	18.75%	25%	31.25%	37.5%	43.75%	50%
Drag Brake	0%	5%	10%	50%	60%	70%	80%	90%	100%
Drag Brake Rate	Level 1	Level 2	Level 3	Level 4	Level 5	Level 6	Level 7	Level 8	Level 9
Neutral Range	0.02ms	0.03ms	0.04ms	0.05ms	0.06ms	0.07ms	0.08ms	0.10ms	0.12ms
Start Mode/Punch	Level 1	Level 2	Level 3	Level 4	Level 5	Level 6	Level 7	Level 8	Level 9
PWM Frequency	1K	2K	4K	8K	16K				
BEC Voltage	7.4V								
Freewheeling/ DEO	Enabled	Disabled							

1).Running Mode

Option 1: Forward with Brake
It's a racing mode. It has only forward and brake functions.
Option 2: Forward/ Reverse with Brake
This option is known to be the "training" mode with "Fwd/Rev/Brk" functions. We have adopted the "DOUBLE-CLICK" method, that is your vehicle only brakes on the 1st time you push the throttle trigger forward (brake) (1st push). The motor stops when you quickly release the throttle trigger and then re-push the trigger quickly (2nd push), only then the vehicle will reverse. The reverse function will not work if your car does not come to a complete stop. The vehicle only reverses after the motor stops. This method is for preventing vehicle from being accidentally reversed.
Option 3: Forward and Reverse
This mode is often used by special vehicles (rock crawler). It adopts the "SINGLE-CLICK" method. The vehicle will reverse immediately when you push the throttle trigger forward (brake).

2).Battery Type

This item provides two options: **LiPo & NiMH**, please select as per your battery and set the cutoff voltage accordingly.

3).Cutoff Voltage

This item is mainly for preventing the LiPo battery from irreversible damage due to over discharge. The ESC monitors the battery voltage all the time, it will immediately cut off the output when the voltage goes below the cutoff threshold. The Red LED will flash "☆, ☆, ☆" when the low-voltage cutoff protection is activated. When the "Battery Type" is set to "LiPo", the voltage corresponds to "Auto (Low)/Auto (Medium)/Auto (High) is 3.0V/3.2V/3.4V per cell; when the "Battery Type" is set to "NiHM", the voltage corresponds to "Auto (Low)/Auto (Medium)/Auto (High) is 4.5V/5.0V/5.5V (for the whole NiMH pack).

4).Initial Start Force

It's the initial force when you pull the throttle trigger from neutral position toward non-throttle throttle position. A suitable start force can effectively prevent vehicle from sliding when you apply a low throttle amount.

5).Max. Forward Force

It's the force when throttle trigger is at the full throttle position. It's adjustable among 25%, 50%, 75% and 100% (by default). You can lower down the value for better driving feel/control when you drive a crawler (simulation model) over difficult terrains (and don't have any requirement against the maximum speed).

6).Max. Reverse Force

Different reverse amount will bring different reversing speed. For the safety of your vehicle, we recommend using a low amount.

7).Max. Brake Force

The ESC provides proportional braking function; the braking effect is decided by the position of the throttle trigger. It sets what percentage of available braking power when full brake is applied. Large amount will shorten the braking time but it may damage your pinion and spur. Please select the most suitable brake amount as per your car condition and your preference.

8).Initial Brake Force

It's also known as "min. brake force". It's the force when pushing throttle trigger from neutral zone to the initial brake position.

9).Drag Brake

Drag brake is the braking power produced when releasing the throttle trigger from full speed to neutral zone.
(Attention! Drag brake will consume much power, so apply it cautiously.)

10).Drag Brake Rate

It's the rate at which the drag brake increases from zero to the pre-set value when the throttle trigger enters the neutral range. A suitable rate can make the vehicle stop stably. You can choose the drag brake rate from level 1 (very soft) to level 9 (very aggressive) as per the track, tires' grip, and etc.

11).Neutral Range

As not all transmitters have the same stability at "neutral position", please adjust this parameter as per your preference. You can adjust to a bigger value when this happens.

12).Start Mode / Punch

You can choose the punch from level 1 (very soft) to level 9 (very aggressive) as per the track, tires, grip, your preference and etc. This feature is very useful for preventing tires from slipping during the starting-up process. In addition, "level 7/8/9" have strict requirement on battery's discharge capability. It may affect the starting-up if the battery discharges poorly and cannot provide large current in a short time. The car stutters or suddenly loses power in the starting-up process indicating the battery's discharge capability is not good, and then you need to reduce the punch or increase the FDR (Final Drive Ratio).

13).PWM Drive Frequency

The acceleration will be more aggressive at the initial stage when the drive frequency is low; a higher drive frequency is smoother but this will create more heat to the ESC.

14).BEC Voltage

This item is not programmable and fixed at 7.4V.

15).Freewheeling/DEO

For regular vehicles, we recommend disabling this function. With it disabled, your vehicle can have quick acceleration. For acrawler (simulation model), we suggest enabling it. With it enabled, you crawler can have better linearity during a low-speed running and also less heat.

6-2. ESC Programming

Program your ESC with a LED program card

The LED program card is an optional accessory for updating the firmware of car ESCs. Its friendly interface makes the ESC programming easy and quick. Before the programming, you need to connect your ESC to the program card via a White/Red/Black PVC cable with two JR male connectors (one end of the cable to the separate programming port on the ESC and the other end to the port marked with " " on the program card), and then turn on the ESC, all programmable items will show up a few seconds later. You can select the item by choosing via "ITEM" & "VALUE" buttons on the program card. Press the "OK" button to save all new settings to your ESC.

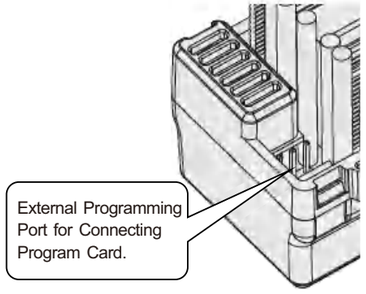

6-3. Factory Reset

Restore the default values with a LED program card

After connecting the LED program card to the ESC, press the "RESET" button and the "OK" button to factory reset your ESC.

6-4. Troubleshooting

Trouble	Possible Cause(s)	Solution(s)
The ESC was unable to start the status LED and the motor after it was powered on.	1. No power was supplied to the ESC. 2. The ESC switch was damaged.	1. Check if all ESC & battery joints or connections have been well soldered or firmly connected, re-solder them if necessary. 2. Replace the broken switch.
The ESC was unable to start the motor (but the Red status LED flashed) after it was powered on.	The throttle control cable was reversely plugged in or in the wrong channel on the receiver, or the throttle stick/trigger was not moved to the neutral position.	Plug the throttle control cable in the TH channel on receiver, or fine -tune the neutral position, if the transmitter supports the "forward/ reverse or backward"proportion setting, then you need to set the proportion to 5:5.
The vehicle ran backward when you pulled the throttle trigger towards you.	1. The ESC-to-motor wiring order was incorrect. 2. Incorrectly set the direction of the throttle channel.	1. Swap the two motor wires. 2. Change the direction of the throttle channel from "NOR" to "REV" or "REV" to "NOR".
The motor suddenly stopped or significantly reduced its output in operation.	1. The receiver was influenced by some foreign interference. 2. The LVC protection was activated. 3. The ESC thermal protection was activated.	1. Check all devices to find out all possible causes, and check the transmitter's battery voltage. 2. The Red LED keeps flashing indicating the LVC protection is activated, so please replace your battery pack. 3. The Red LED keeps flashing indicating the ESC thermal protection is activated, please let your ESC cool down before using it again.
The vehicle could run forward but could not reverse.	1. The throttle neutral position on your transmitter was actually in the braking zone. 2. Set the "running mode" improperly. 3. The ESC was damaged.	1. Re-calibrate the throttle neutral position, no LED on the ESC will turn on when the throttle trigger /stick is at the neutral position. 2. Set the "running mode" to "Fwd /Rev/Br"or "Fwd/Rev". 3. Contact your dealer for repair service.
The vehicle moved forward or backward slowly when the throttle trigger was at the neutral position.	1. The signals emitted by the transmitter were not stable. 2. The throttle range was not calibrated properly.	1. Replace the transmitter with another one that has stable signals. 2. Please fine-tune the neutral position on the transmitter.
The LED display kept displaying "---" after the LED program card was connected to the ESC.	Connected the LED program card to the wrong port on the ESC.	Connect the LED program card to the separate port marked with " ⊖⊕ " on the ESC.

7. Specifications

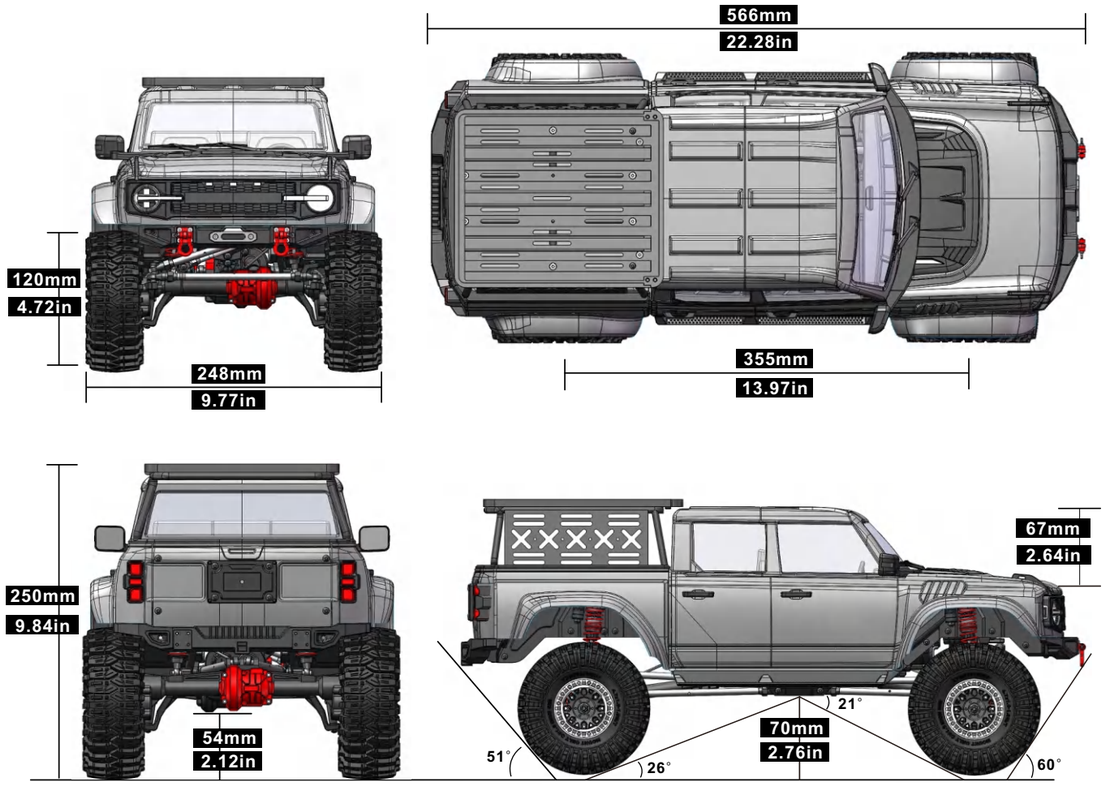

Item No	Ex86150
Item Name	PATHFINDER
Scale	1/10
Desciption	RTR-Crawler
Drive Type	4WD
Length	566mm
Width	248mm
Height	250mm
Wheel Base	355mm

Wheel	120*45mm
Clearance	70mm(classis) 54mm (steel)
Weight	3.68kg(No battery)
Radio/Rx	2.4G/6CH(X6-P1)
R/C Distance	<120m>100m
Battery Recommendations	2S or 3S Lipo, 5-9 Cells NIMH Battery
Battery Size	<142*48*55mm(L*W*H)
Number Of Differentials	“Steel” 2P
ESC	WP-880 / 80A

Motor	550/8020
Servo	30kg*1p/ 9g*3p
Gead Ratio	26.6:1(H),50.4:1(L)
Breakover	21°
Approach	60°
Departue	51°
Body Color	PC Red/Green /Gray
Gift Box Size	630*285*325mm
Piece per Carton	1P

8. All the ways done,your car is ready to run. Hope you enjoy the fun in driving it.

Tip: Always turn off the receiver and then the transmitter when not in use. Clean the car before storage.

Vehicle Maintenance:

1).Please remove the battery pack plug or take it out, when the car is out of use.
2).Before each use, please redo the above steps and check all the parts condition if over wear.
3).Ensure the unused battery pack over-discharge (recommended to be above 40%), and keep in a dry and cool place, out of reach of children.
4).After each use, please carefully check all the parts condition, and repair or replace the worn part. Use a fine brush to sweep the sand, marl and other dirt inside the model, then wipe it cleanly by a soft cloth.

9. Troubleshooting

Problem	Possible Cause	Solution
Car does not respond during operation	Electronic plugs loose or fall off	Switch off and reconnect
	Vehicle battery not charged, activating the ESC low voltage cut-off to protect the battery	Replace/recharge the vehicle battery
	Motor or ESC dirty or damaged	replace new Motor (recommend to purchase facoty Motor)
	ESC failed	replace new ESC (recommend to purchase facoty ESC)
	ESC power off by overheated Motor	Stop operation and cool the ESC or Motor
	Motor overheated, demagnetized or damaged	replace new Motor (recommend to purchase facoty Motor)
	Transmitter batteries low or beyond the remote control distance	Replace the transmitter batteries, adjust the remote control distance
	Transmitter damaged	Relace or contact seller
No Backward, forward normally	ESC "operation mode" setting error	Refer to manual "ESC" , set "operation mode " into "forward and backward reverse with brake"
	ESC damaged	Relace or contact seller
	Throttle damaged or transmitter throttle not centered	Refer to manual "Transmitter", and reset
Car operate automatically, with no control	Throttle trim out of center on transmitter	Refer to manual "Transmitter", and reset
	Neutral throttle is in incorrect position	Adjust ESC in neutral point
Normal operation, speed shift failure	Error Operation	Ensure to operate in stop status, more refer to the Manual
	Gear Cable damge or loose	Replace the accessory or Readjust
	Servo wire inserts in wrong Receiver slot	Refer to the manual, Readjust
Sluggish Action	Battery damaged / not charged	Check, change or recharge
	Throttle trim out of center on transmitter	Adjust (refer to manual "transmitter")
	Motor dirty/ damaged	Clean/ replace
	Drivetrain dirty / damaged	Check and clean
Light Function Failure after Battery properly installed	Light Plug is not connected or in wrong postion	Check the plug connection
	Transmitter Set Error or Light Control Panel Damage	Reset the Transmitter. Otherwise, please check the light control panel is damaged or not.
	Light Cable in wrong installation and connection	Readjust the installation and Connection
Lack of streering and throttle	ESC power off by overheat	Stop operation, cool the ESC
	Transmitter too near interfere electronical objects	Check and rebind transmitter and receiver, refer to manual
Vehicle moves left / right without steering input	Steering accessories damaged	Check and replace
	Wheel loose	Check and replace
	Drivetrain dirty / damaged	Check and replace
Controls Reversed	ST. REV or TH. REV	Change switch position, refer to manual
	Check the wires between ESC and Motor correct or not	Switch the motor black and red wire
Clicking noise in operation	Check the bodyshell damaged or fall off	Retrim or replace
	Loose or tight between motor gear and main gear	Reset gear mesh
	Gear damaged or rocked	Remove gear cover and inspect. If necessary, replace gear
Only steering, no forward and backward	ESC failed or abnormal	Reset the neutral point or replace
	Transmitter failed or abnormal	Relace or contact seller

Transmission Assembly-1

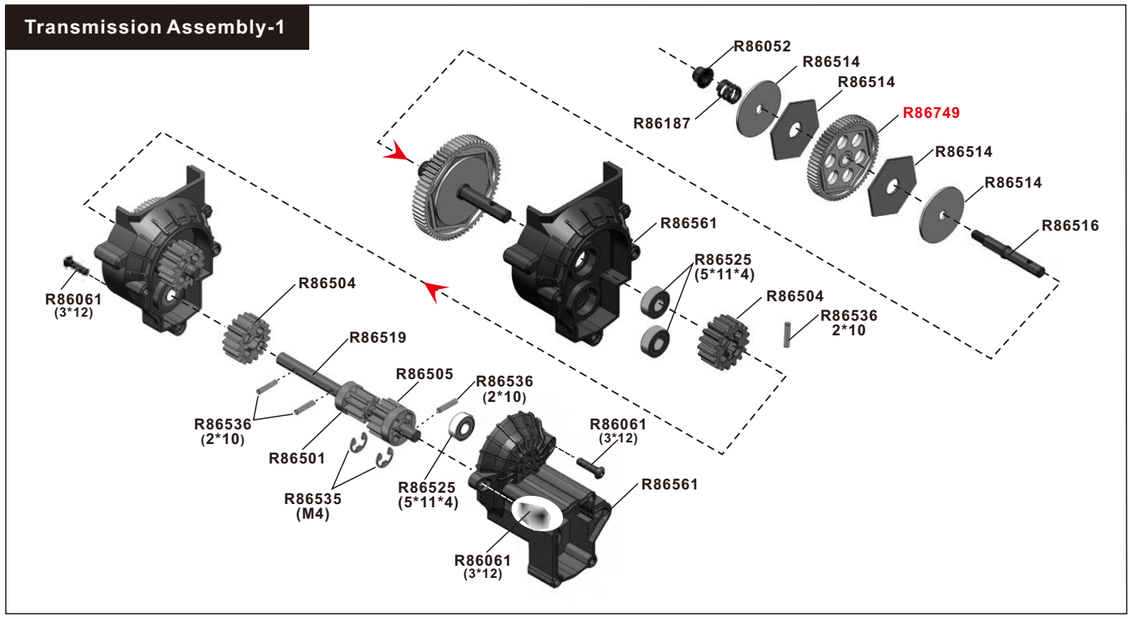

Transmission Assembly-2

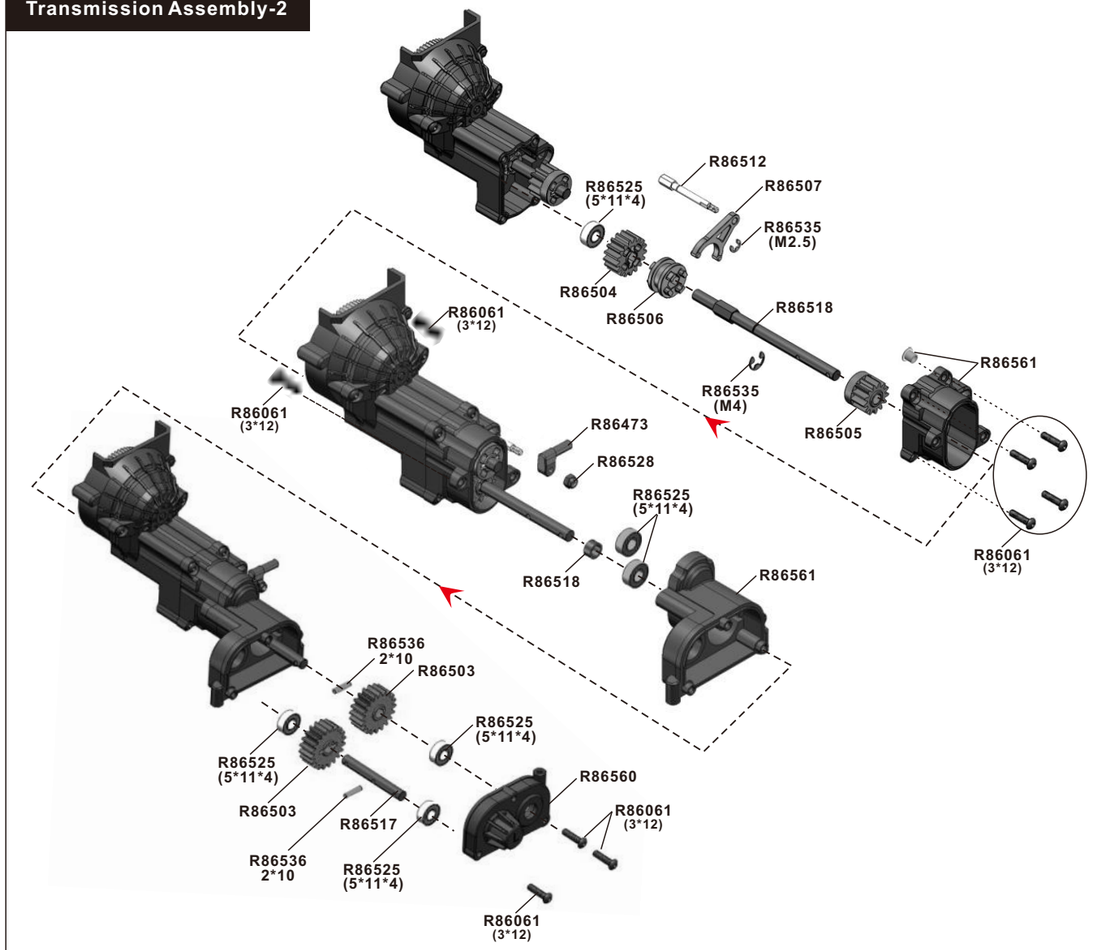

Motor/Transmission Assembly

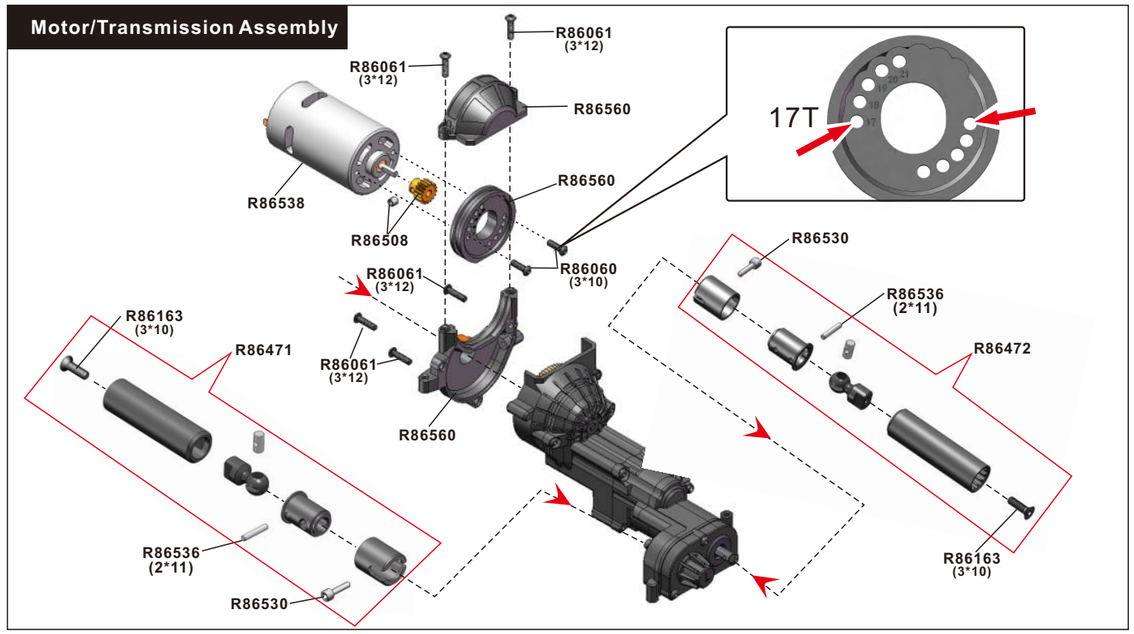

Diff.gear Assembly

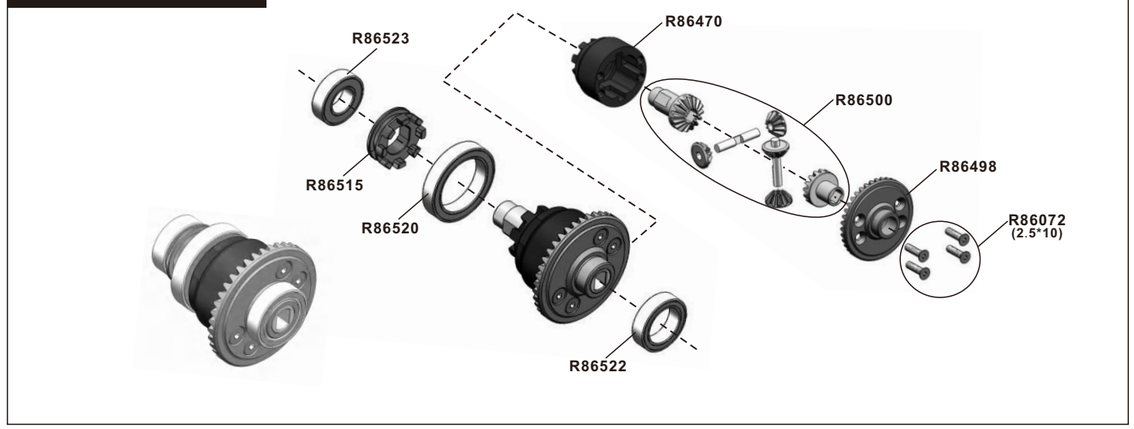

Front Axle Assembly

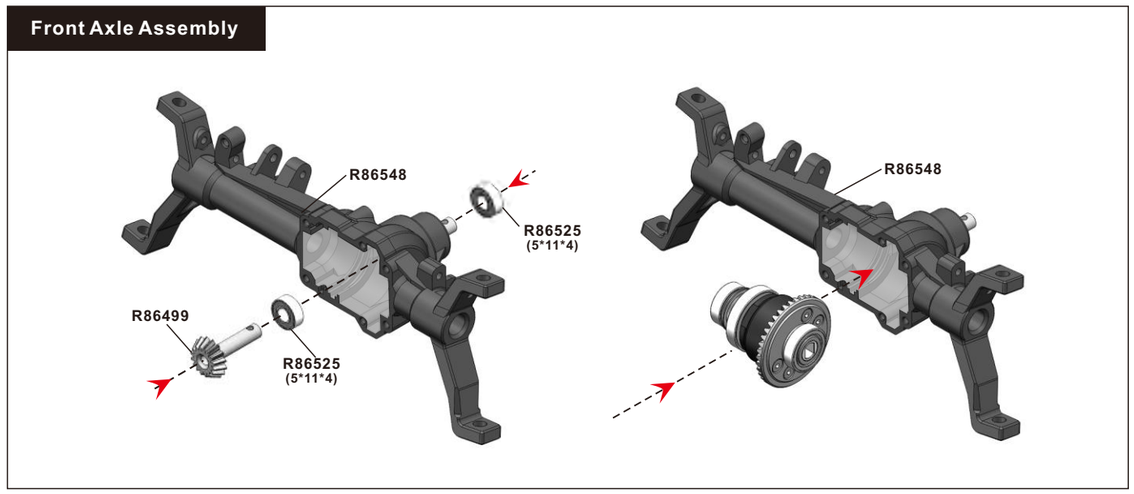

Rear Axle Assembly

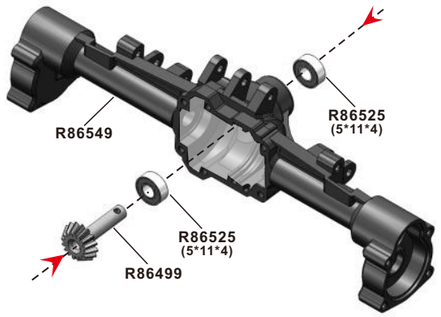

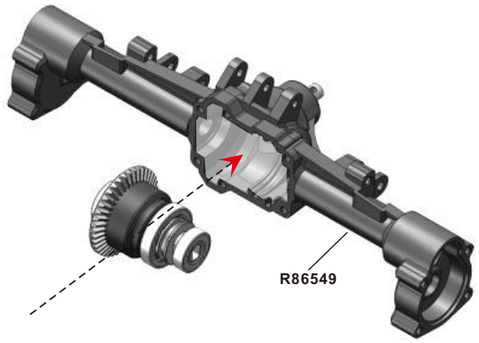

Diff.Lock Line Assembly (Front)

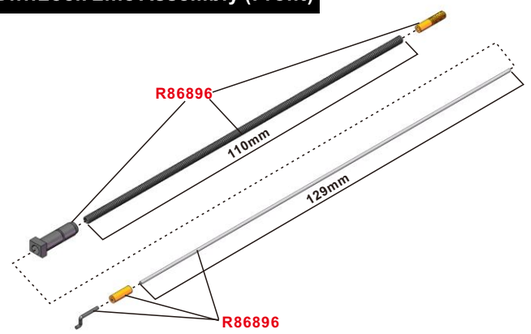

Diff.Lock Line Assembly (Rear)

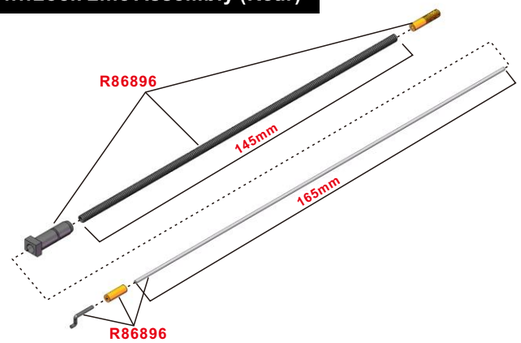

Diff. Lock Clasp (F-1)

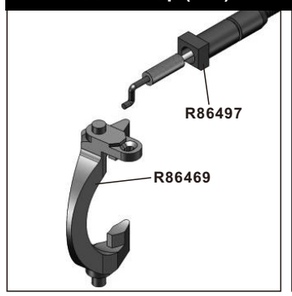

Diff. Lock Clasp (F-2)

Diff. Lock Clasp (R-1)

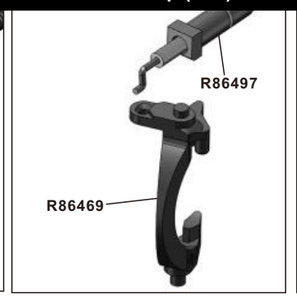

Diff. Lock Clasp (R-2)

Front Diff. Illustration

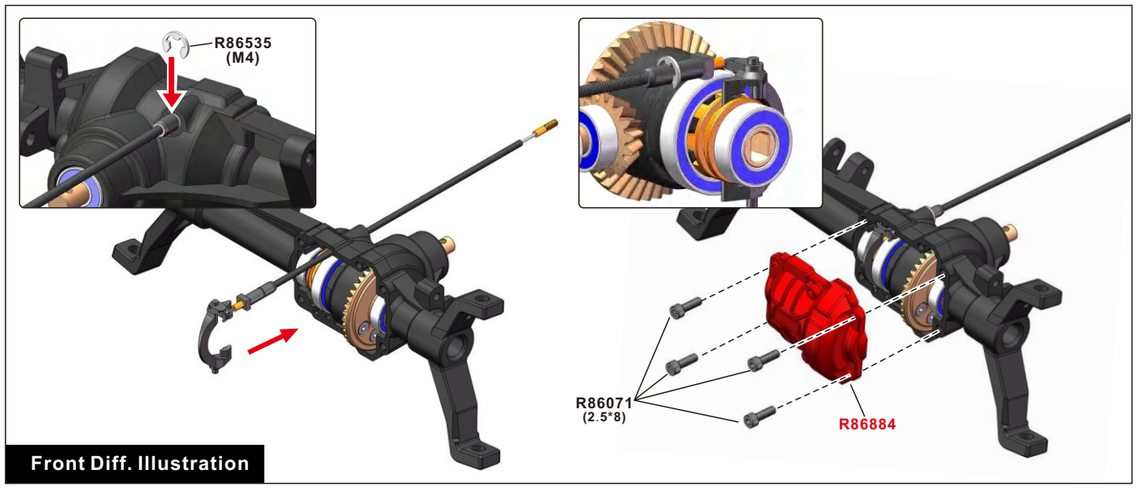

Rear Diff. Illustration

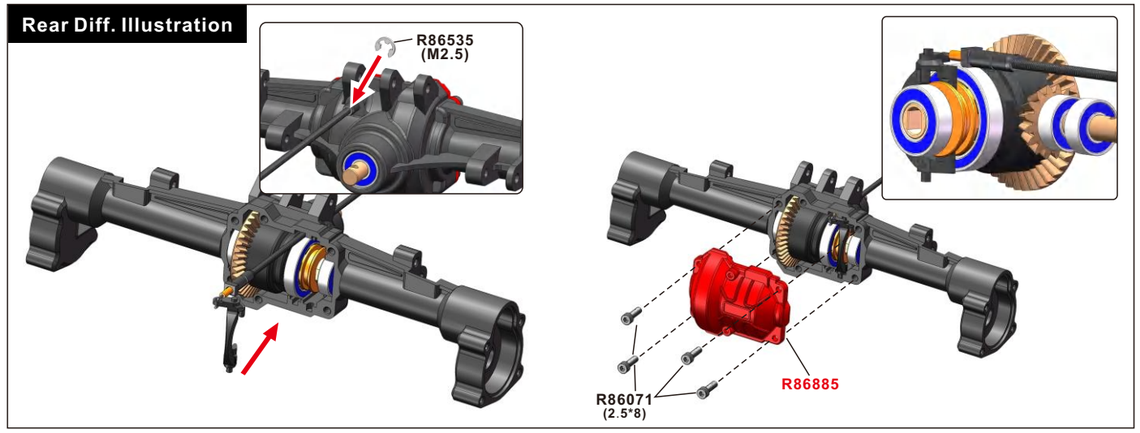

Rear Axle Transmission illustration

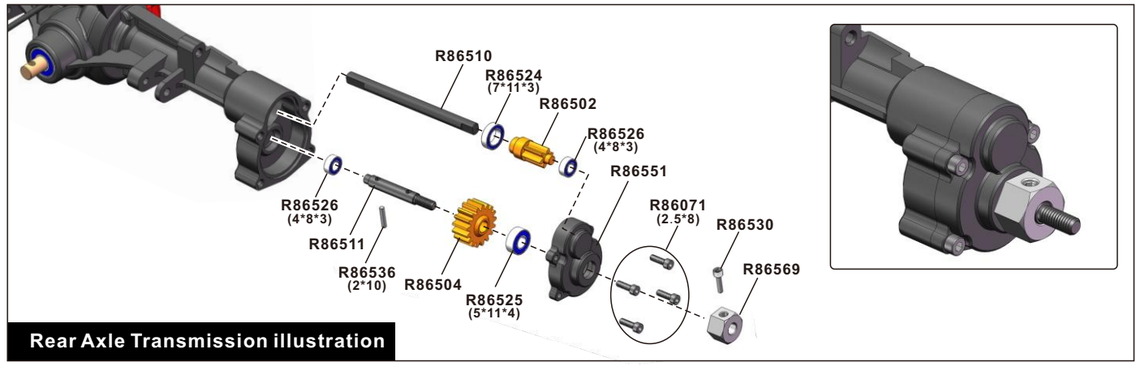

Front Gear Transmission (Right)

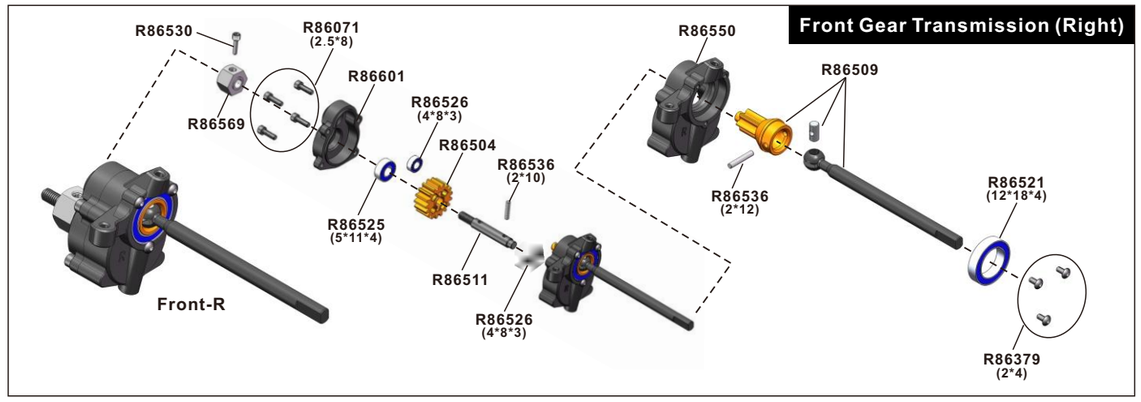

Front Gear Transmission (Left)

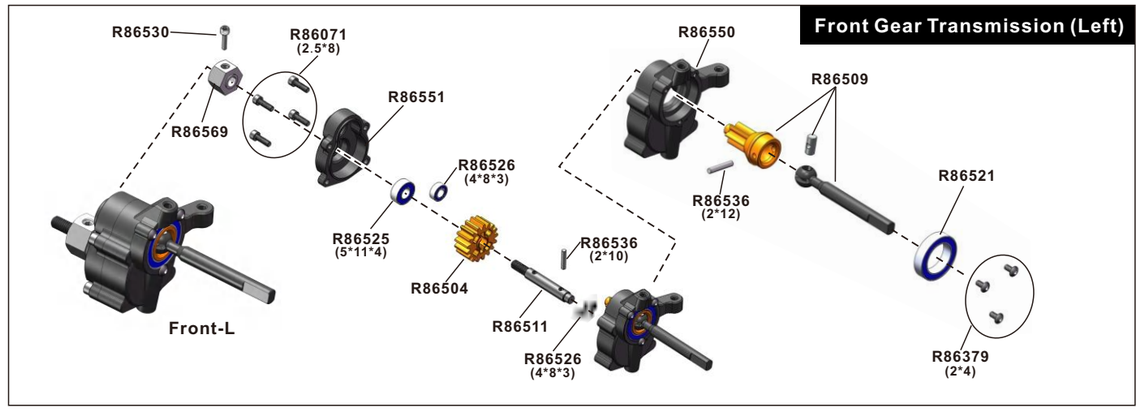

Shock Absorber Assembly

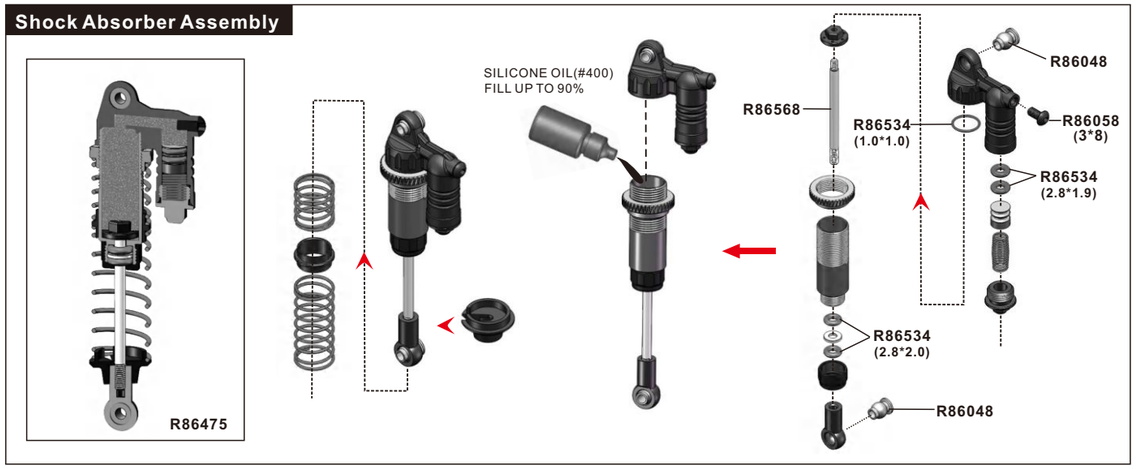

Front Axle Assembly

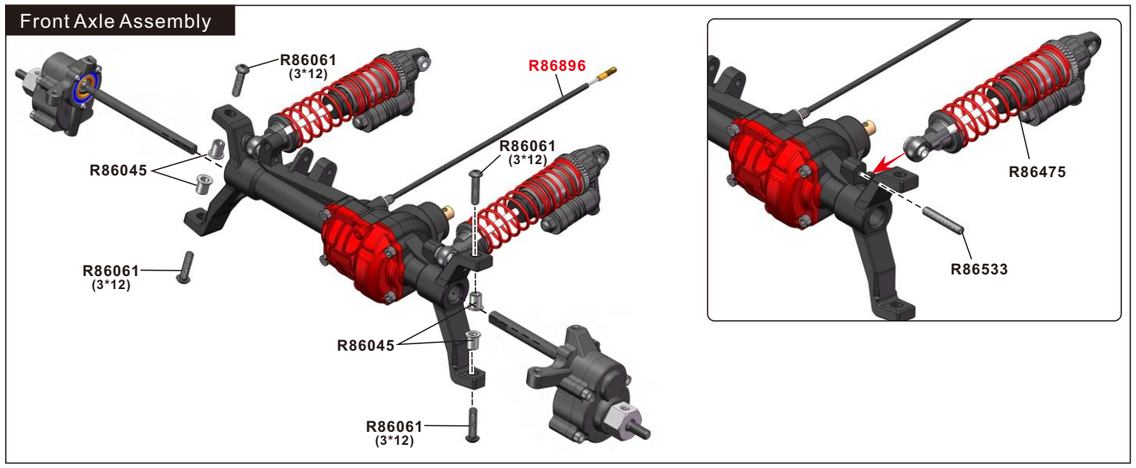

Linkage Bar Assembly

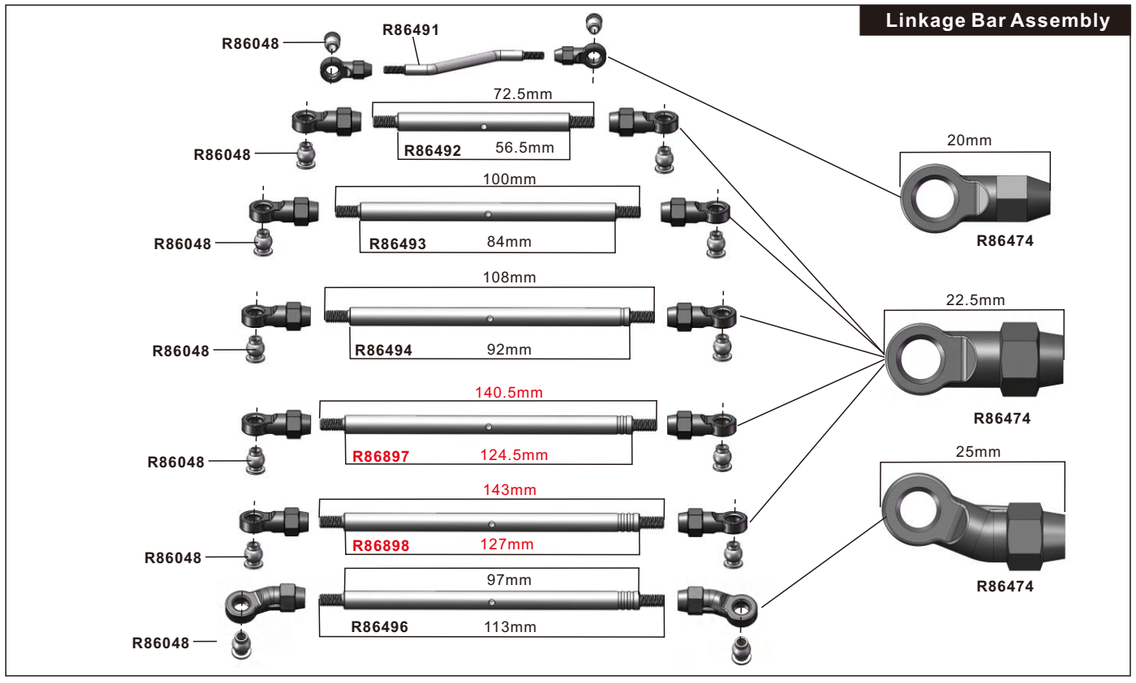

Front Steering Linkage Installation

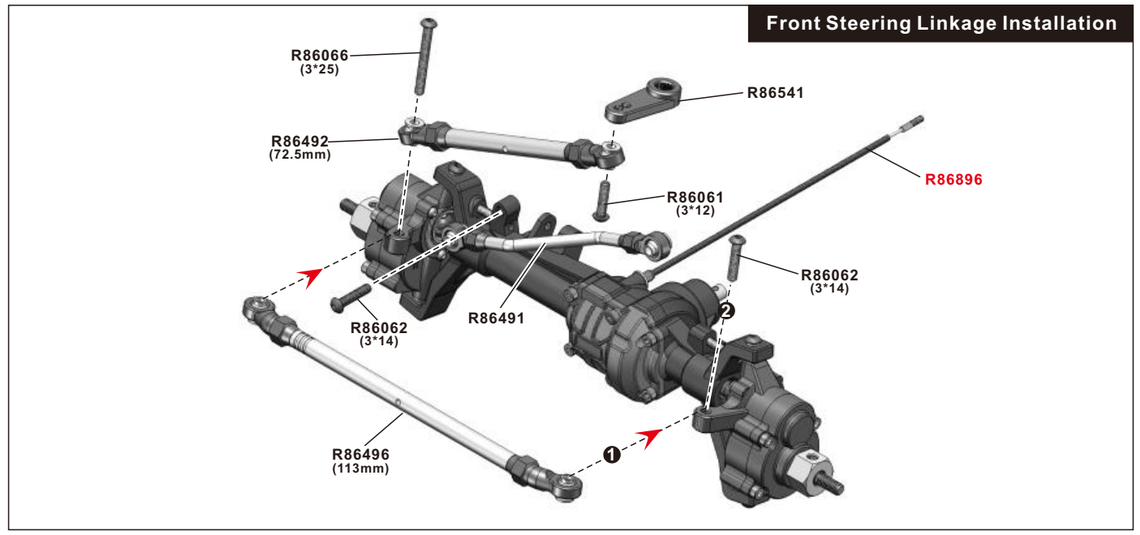

Front Suspension Linkage Installation

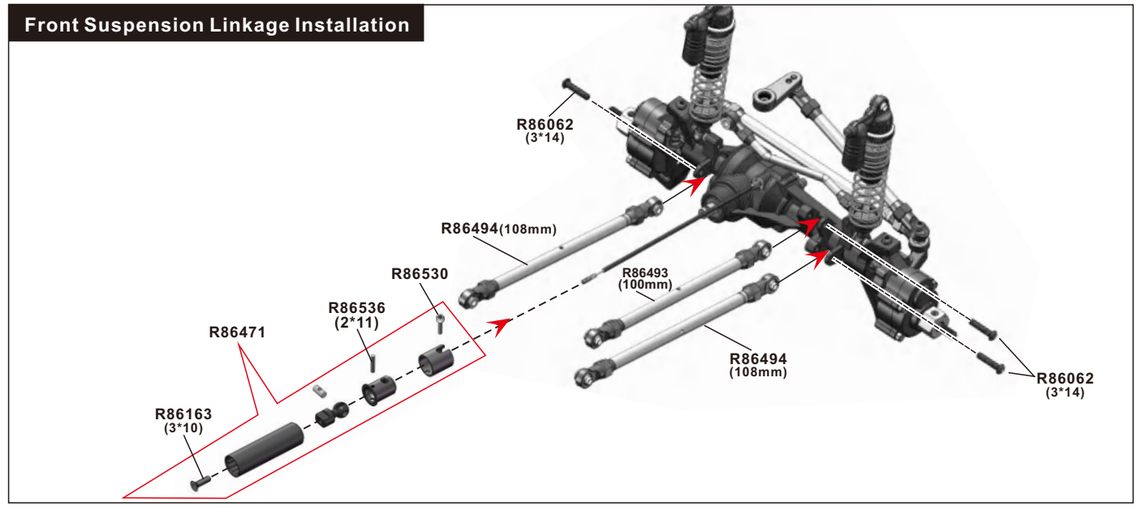

Rear Suspension Linkage Installation

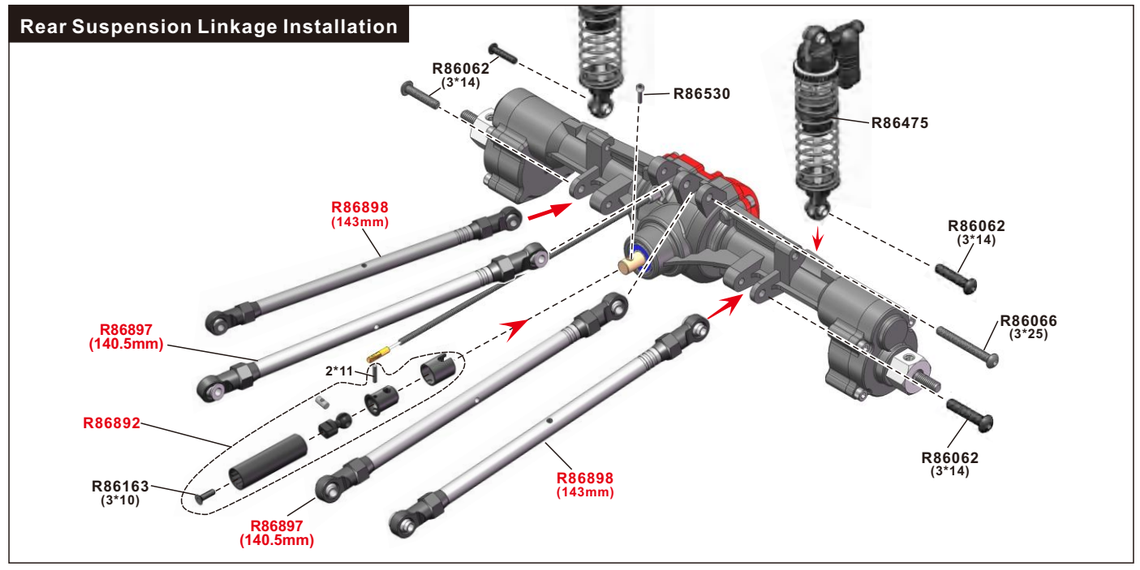

Main Body (Front Right)

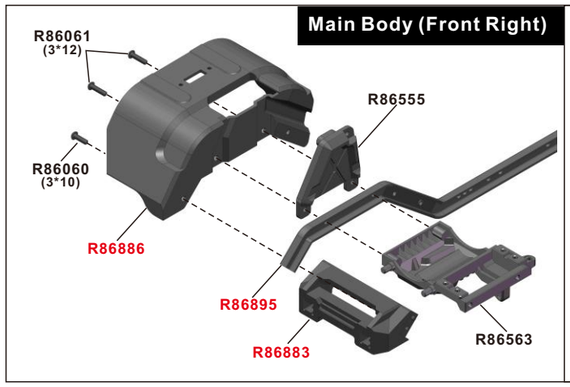

Main Body (Rear Right)

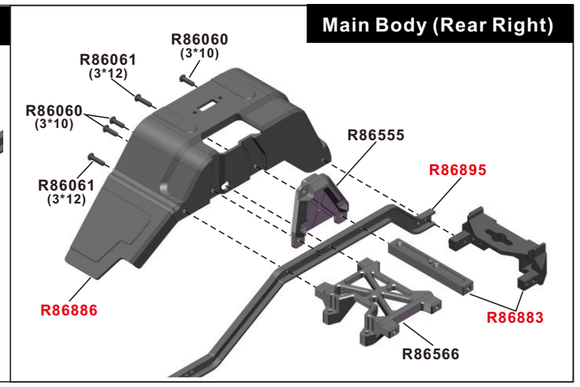

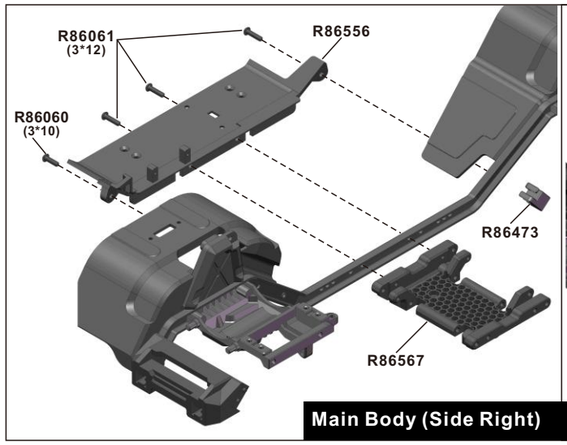

Main Body (Side Right)

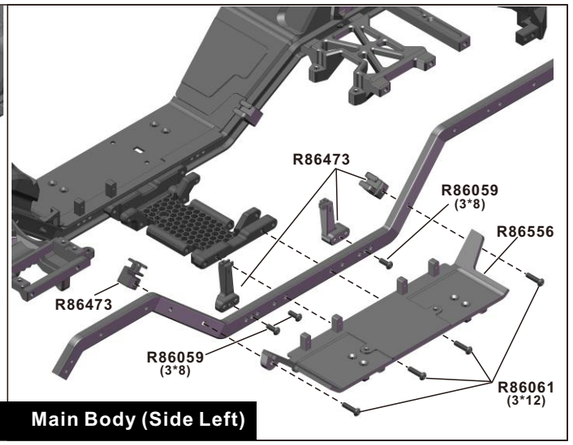

Main Body (Side Left)

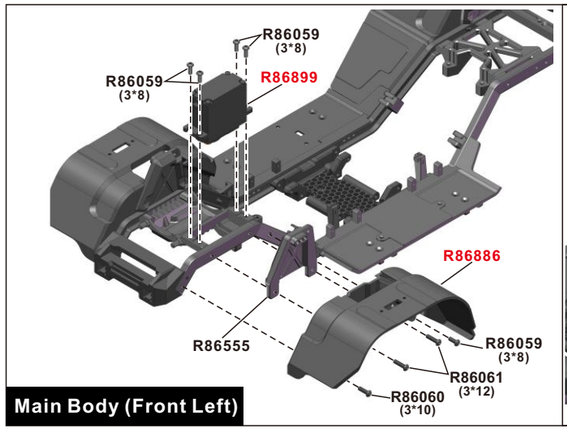

Main Body (Front Left)

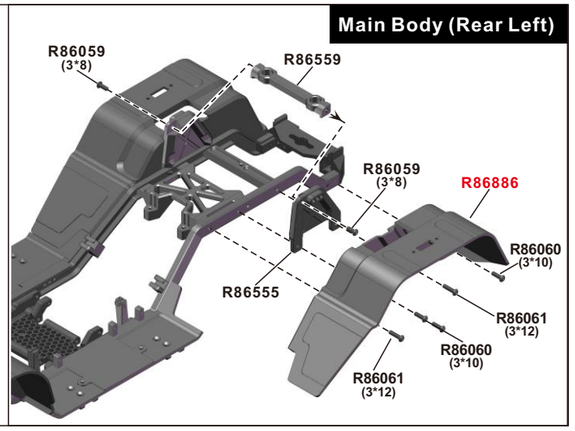

Main Body (Rear Left)

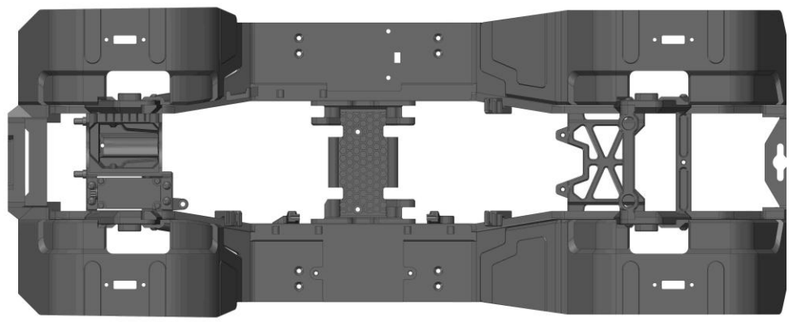

Mounting Center Gear Box

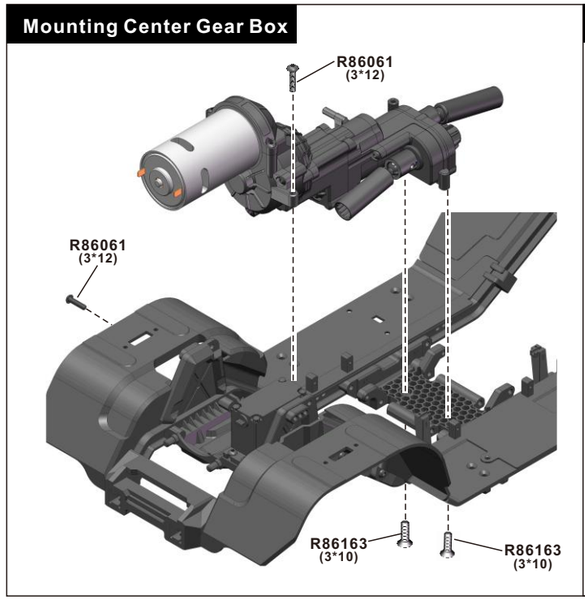

Mounting Engine Hood

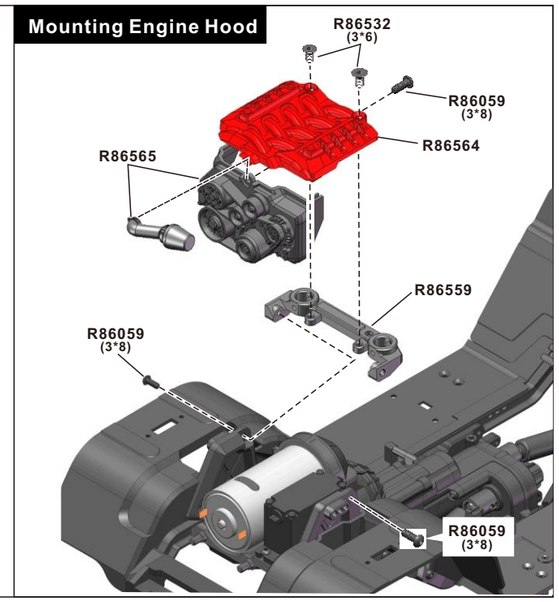

Installing Front Axle Complete

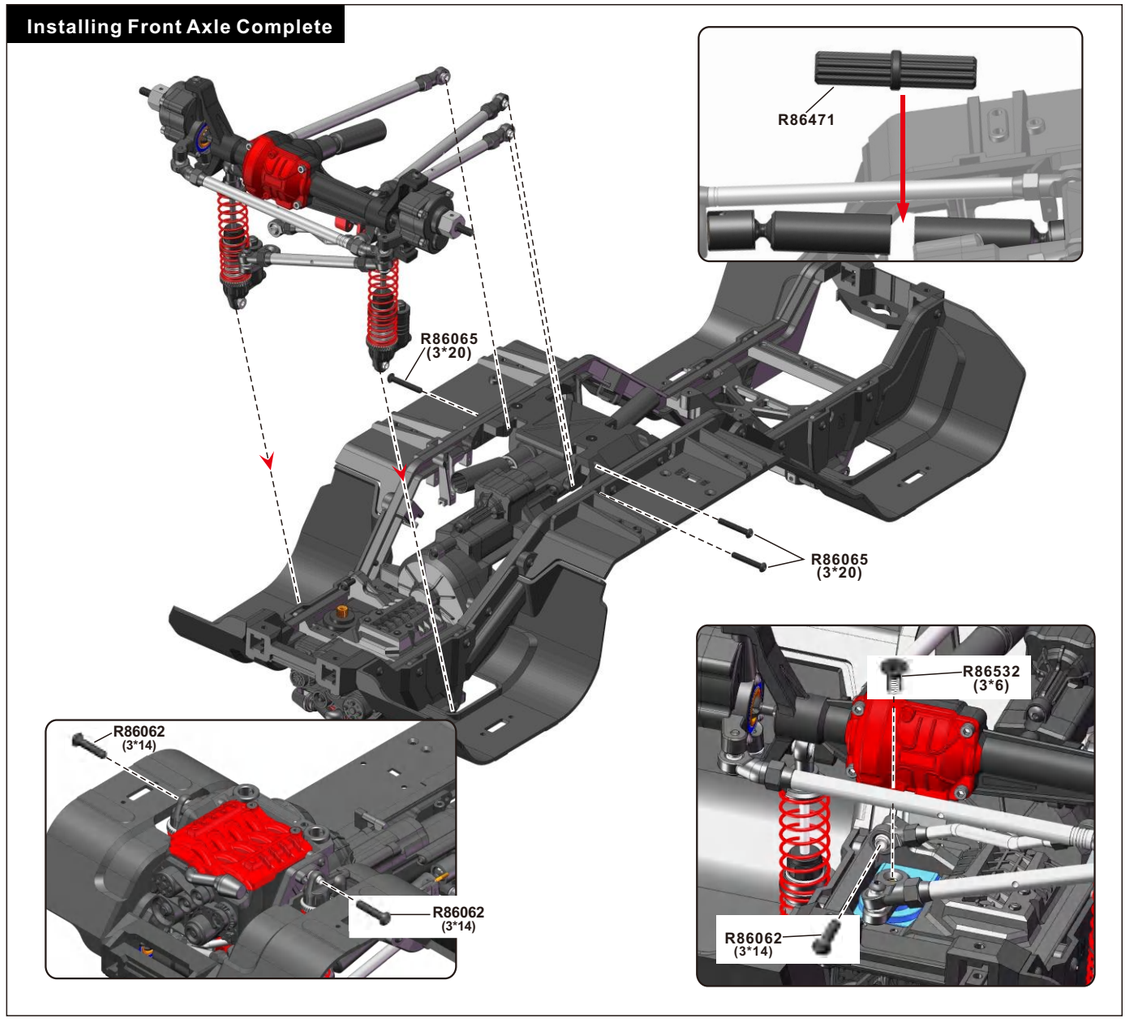

Installing Rear Axle Complete

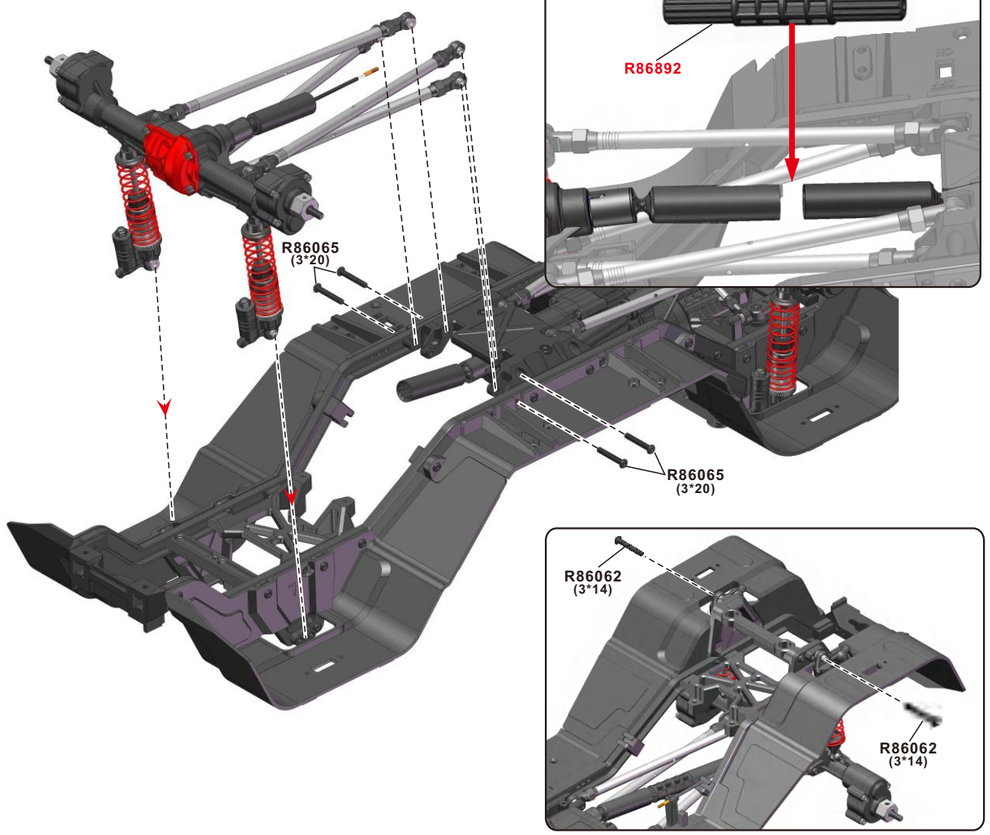

(Left)

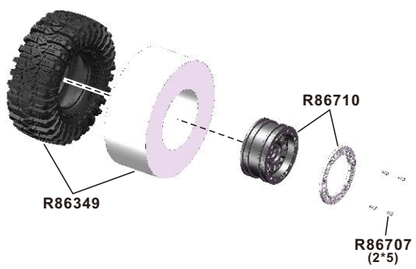

(Right)

Installing Wheel Complet To Vehicle

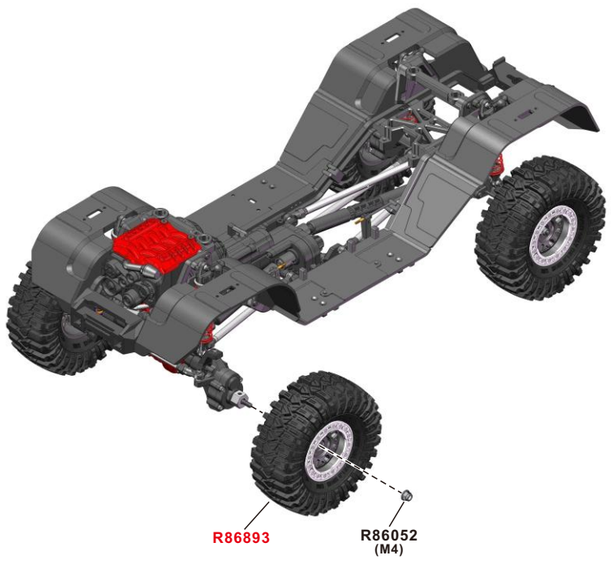

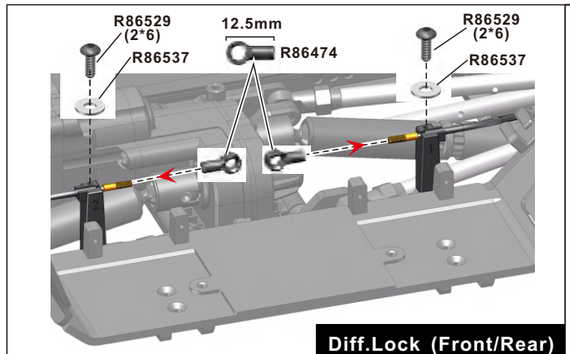

Diff.Lock (Front/Rear)

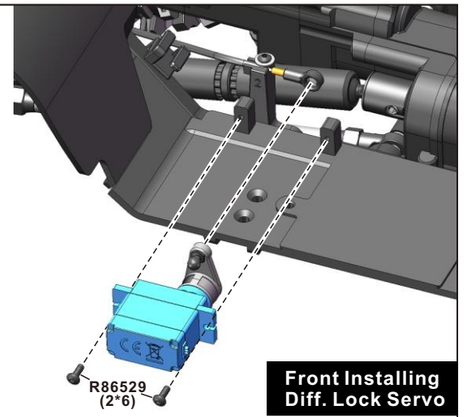

Front Installing Diff. Lock Servo

2 ⟷ 2

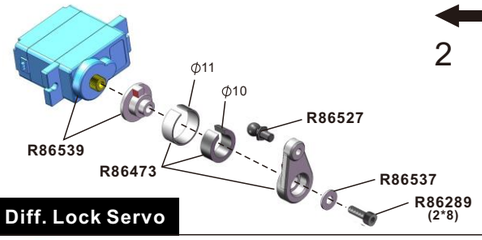

Front Diff. Lock Servo

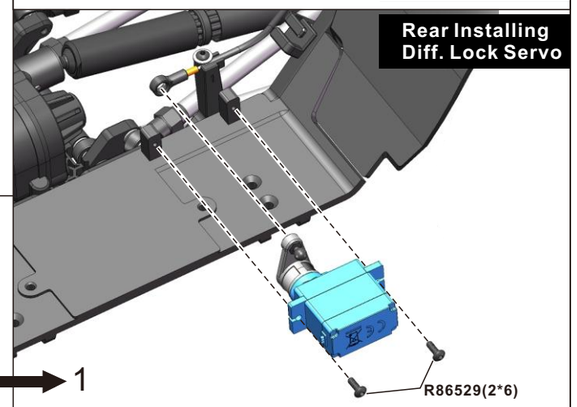

Rear Installing Diff. Lock Servo

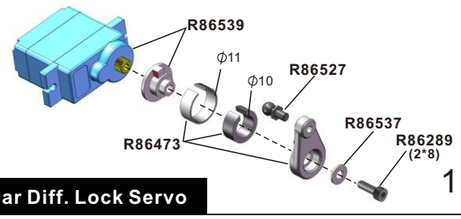

Rear Diff. Lock Servo

1 ⟷ 1

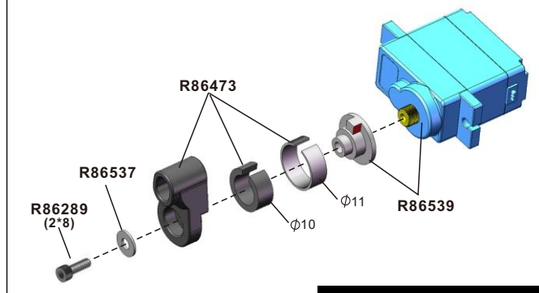

Transmission Servo

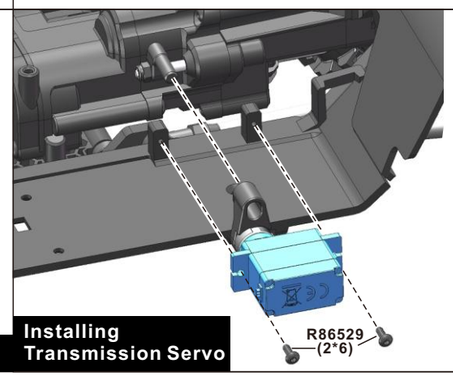

Installing Transmission Servo

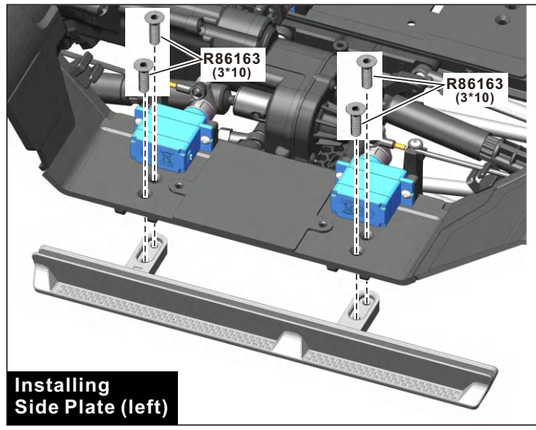

Installing Side Plate (left)

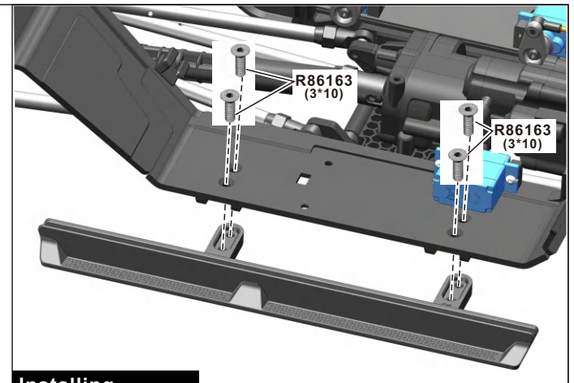

Installing Side Plate (Right)

Front Bumper Assembly

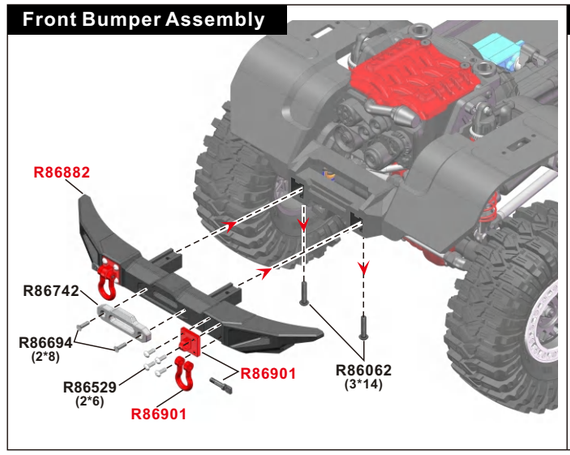

Rear Bumper Assembly

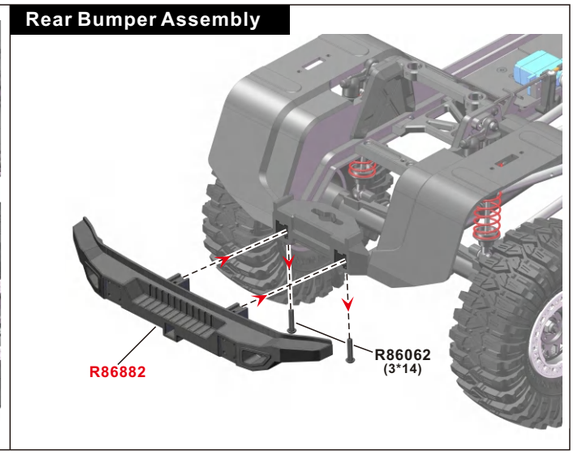

Installing Battery Holder

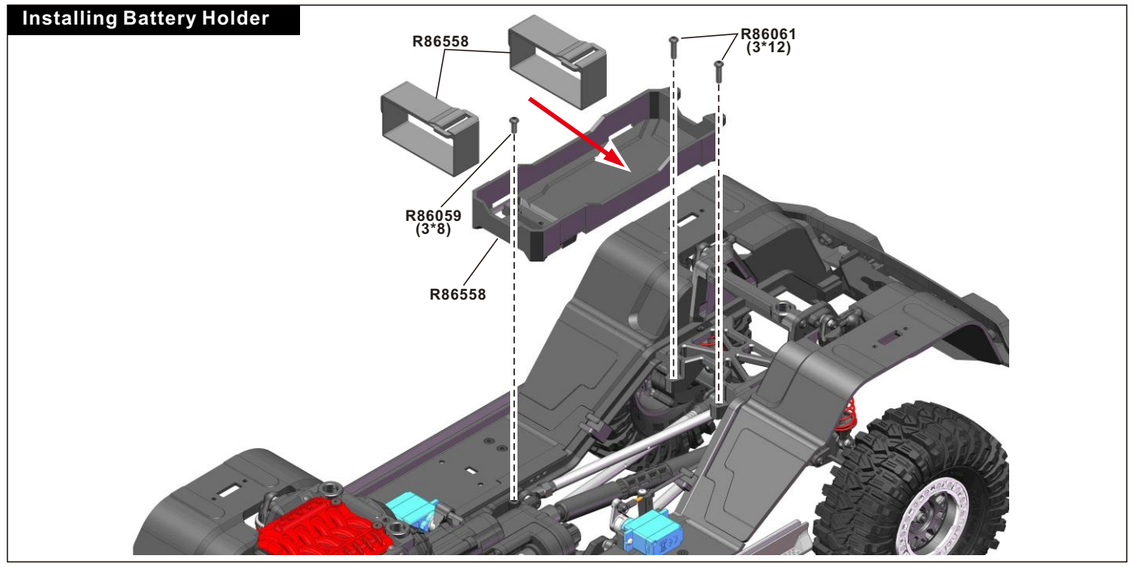

Installing ESC/Receiver

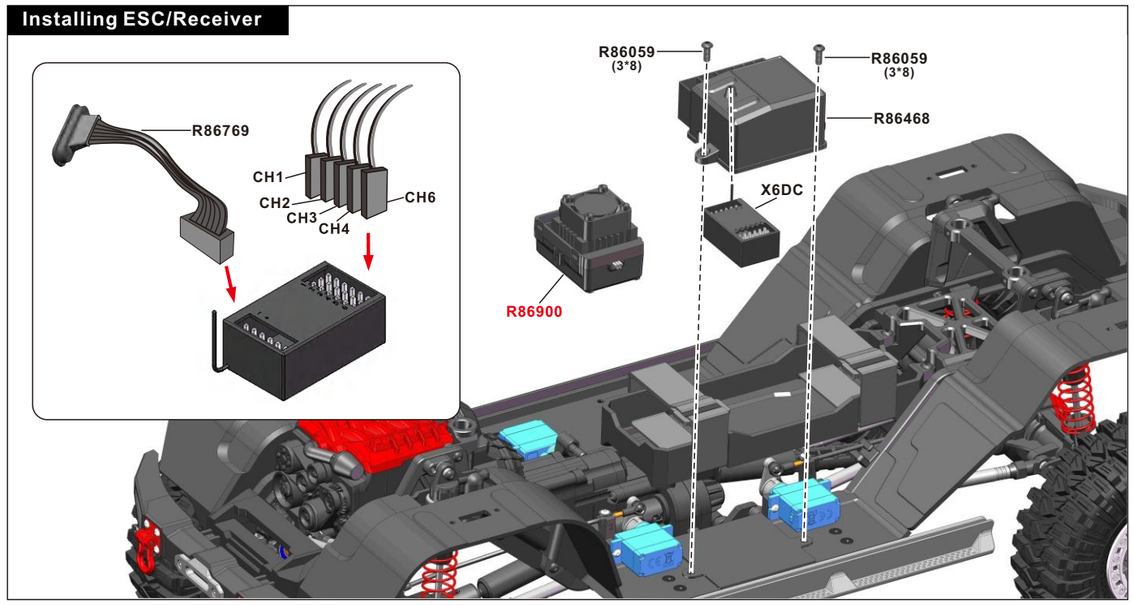

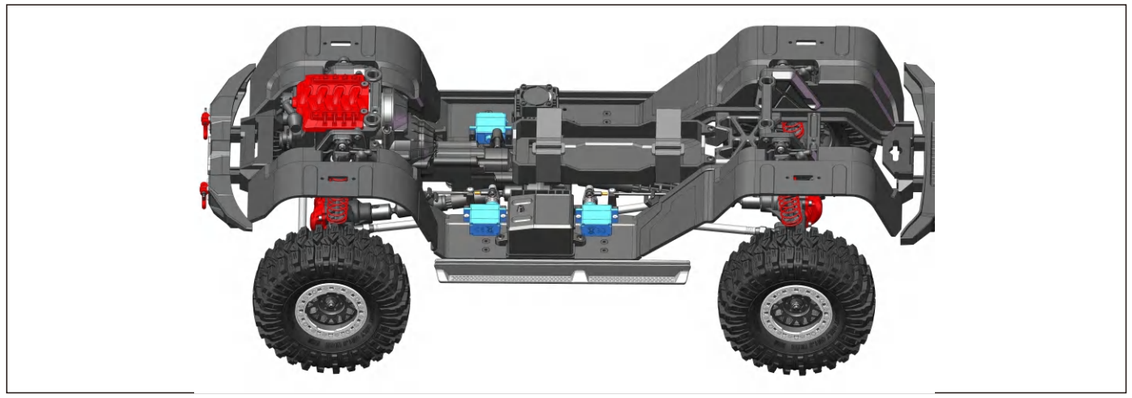

Body Assembly-1

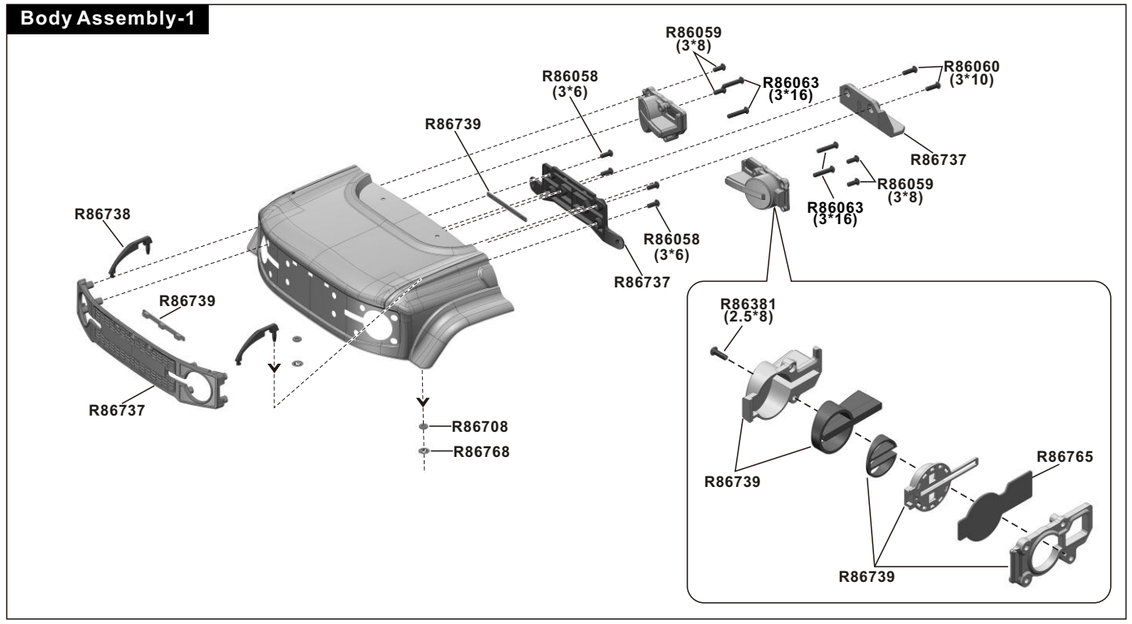

Body Assembly-2

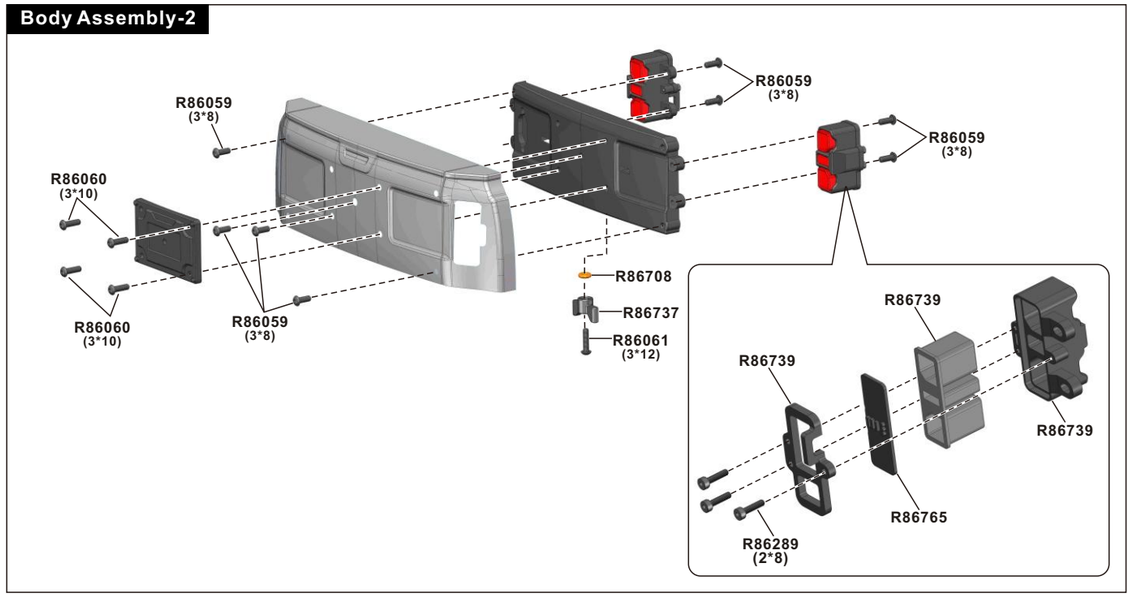

Body Assembly-3

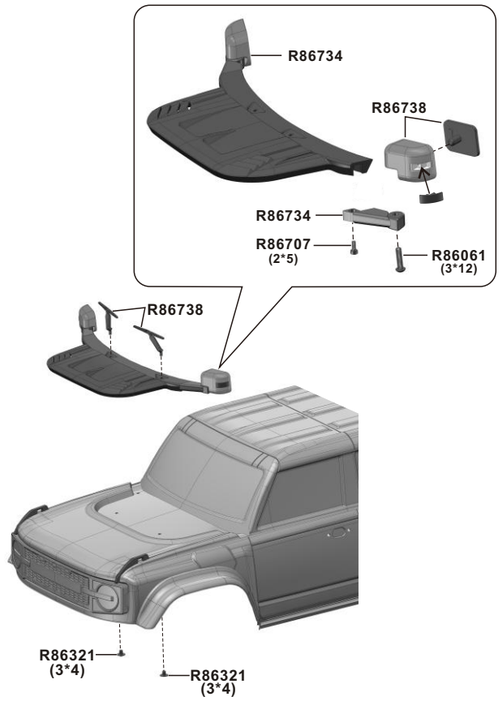

Body Assembly-4

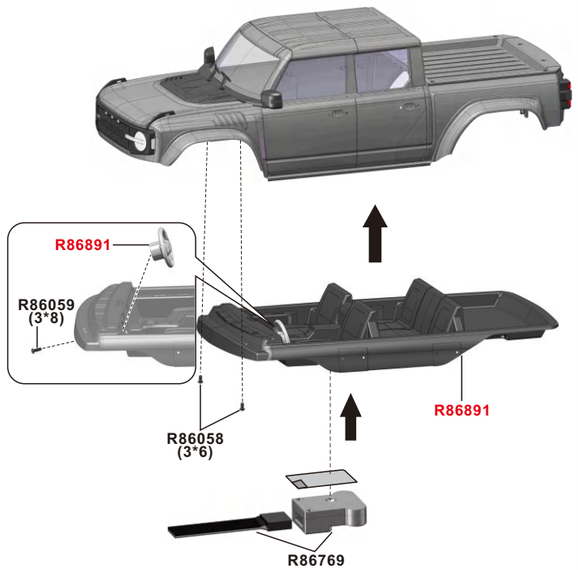

Body Assembly-5

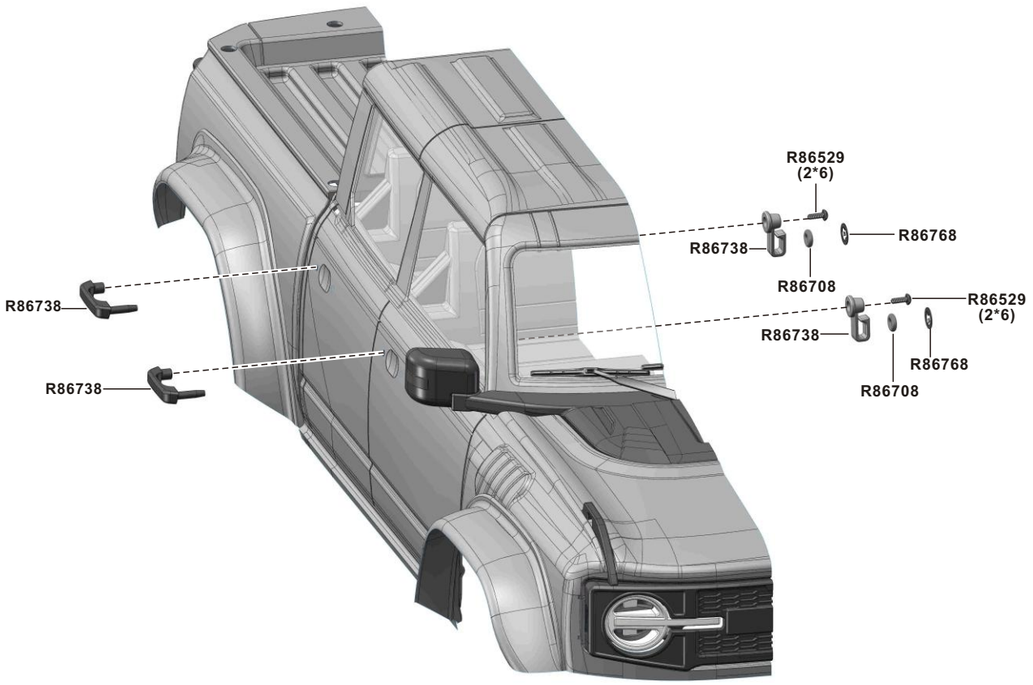

Body Assembly-6

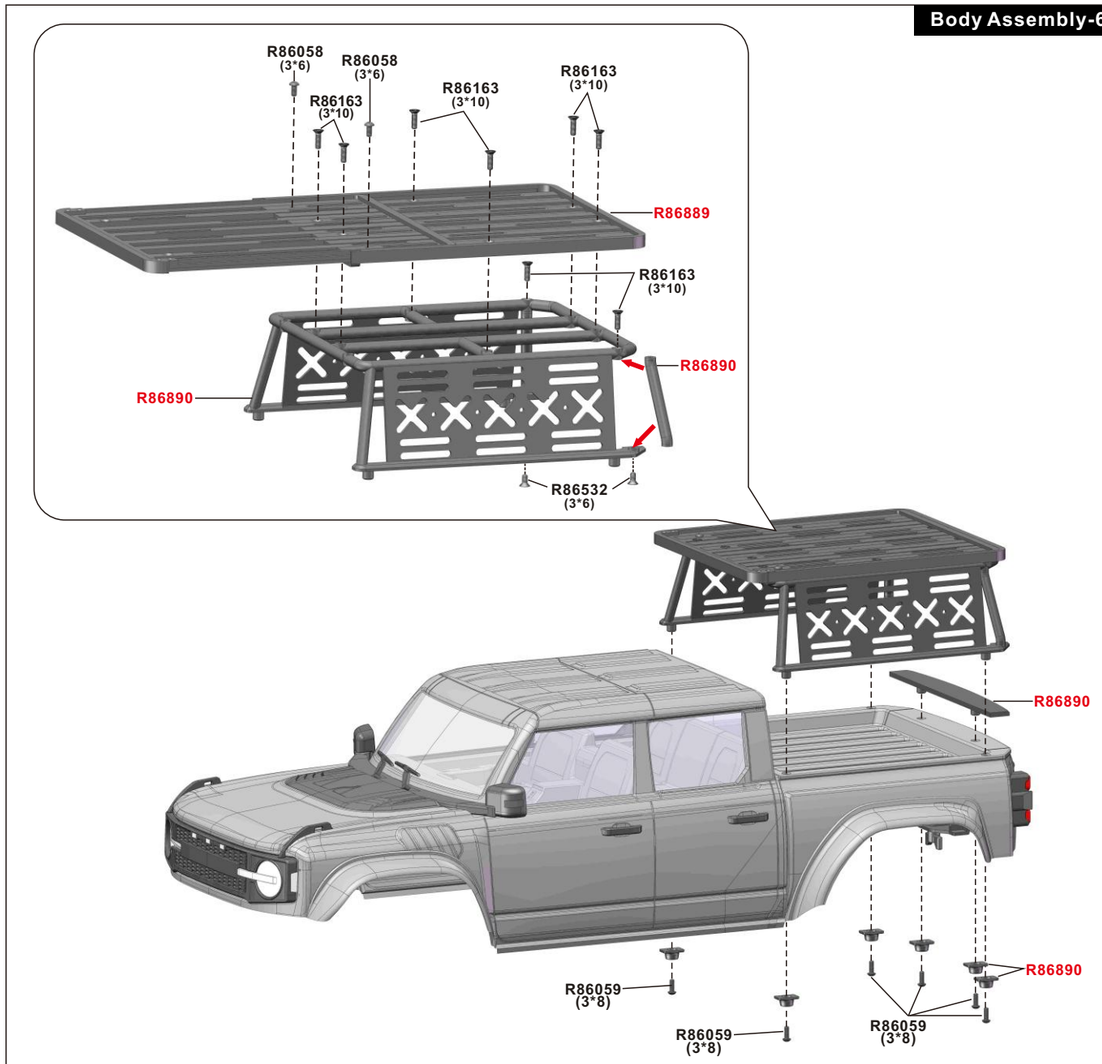

Body Assembly-7

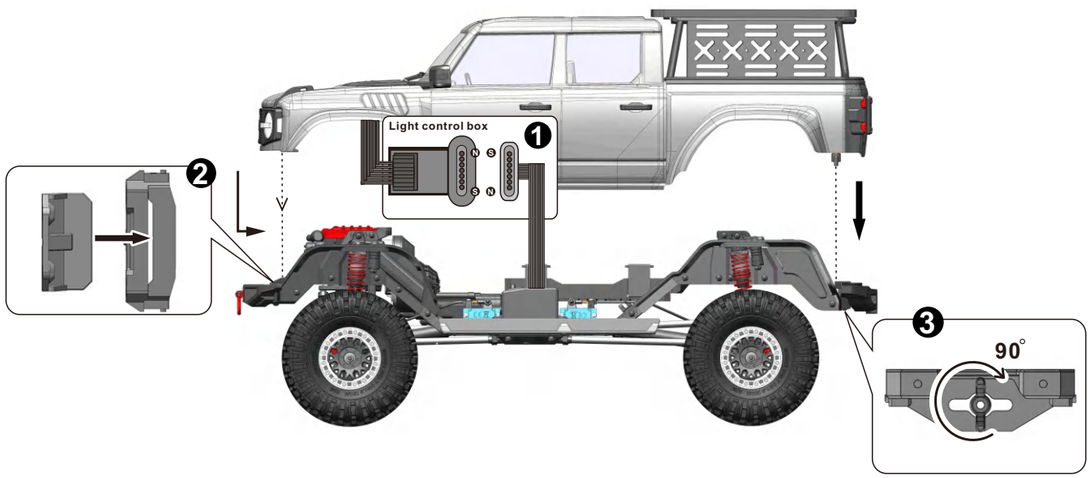

Spare Part

R86882	R86883	R86884	R86885	R86886
				
Front/Rear Bumper	Bumper Mount	(electroplate) Front Gear Box Lid	(electroplate) Rear Gear Box Lid	Baffle A(L/R)

R86887	PC Body+Sticker	Pre-Assembled PC Body
 Foot Pedal	R86888-0(Clear) R86888-1(Red) R86888-2(Green) R86888-3(Grey) 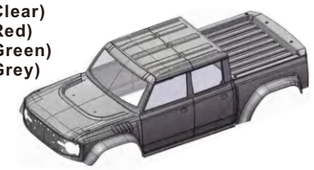	P86489-1(Red) P86489-2(Green) P86489-3(Grey) 

R86889	R86890	R86891	R86892	R86893
				
Tail Plate	Roof Rack	PVC Cockpit+Sticker	Rear Driveshaft	Wheel Complete L/R

R86349	R86710	R86548	R86549	R86550
				
Tire W/Foam	Wheel Rim(Matte Silver)	Front Housing	Rear Housing	Steering HubCarriers

R86563	R86564	R86565	R86566	R86567
				
Servo Mount	Motor Cover Upper	Motor Cover Front	Caster Mount	Chassis Mount

R86551	R86468	R86469	R86470	R86471
				
Transmission Housing Lid	Receiver Box	Lock Diff Button	Differential Box	Front Driveshaft

R86555	R86556	R86558	R86559	R86475
				
Shock Plate(L/R)	Baffle B(L/R)	Battery Tray	Body Mount(F/R)	Shock Absorbers

Spare Part

R86488	R86560	R86561
		
Tank	Transmission Box A	Transmission Box B

R86734	R86473	R86474
		
Engine Cover Kit	Dig Servo Parts	Link Ends

R86742	R86738	R86739
		
Winch Mount	Body Assembled Part	Bodyshell Light Accessories Kit

R86749	R86737	R86894
		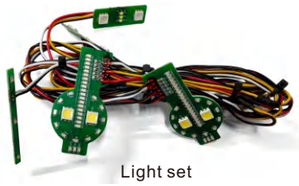
Crown Gear (64T)	Body Accessories	Light set

R86895	R86491	R86492	R86493
			
Chassis Rails	Panhard Bar Link	Link 72.5mm	Link 100mm

R86896	R86494	R86496	R86897
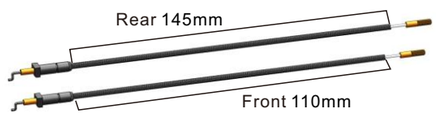			
Front/Rear Lock Diff Line	Link 108mm	Link 113mm	Link 140.5mm

R86898	R86498	R86499	R86500	R86501
				
Link 143mm	Diff Main Gear(40T)	Drive Gear(16T)	Diff Bevel Gear Set	Transmission Gear(9T)

Spare Part

R86502	R86503	R86504	R86505	R86506
Transmission Gear(6T)	Transmission Gear(20T)	Transmission Gear(17T)	Transmission Gear(13T)	Transmission Slider
R86507	**R86509**	**R86510**	**R86511**	**R86512**
Gear Stick	6T CVD Drive shaft	Rear shaft	Drive shaft	Gear Shaft 1
R86568	**R86187**	**R86514**	**R86515**	**R86516**
Shock Shaft	Sping	Slipper Spacer/Plate	Differential Lock	Gear Shaft 2
R86517	**R86518**	**R86519**	**R86520**	**R86521**
Gear Shaft 3	5.2*7*3.5 Gear Shaft 4	Gear Shaft 5	Ball Bearing Ø15*Ø21*4	Ball Bearing Ø12*Ø18*4
R86522	**R86523**	**R86524**	**R86525**	**R86526**
Ball Bearing Ø10*Ø15*4	Ball Bearing Ø7*Ø14*4	Ball Bearing Ø7*Ø11*3	Ball Bearing Ø5*Ø11*4	Ball Bearing Ø4*Ø8*3
R86045	**R86527**	**R86048**	**R86052**	**R86528**
King Pin Bushing	Ball Stand Ø4mm	Ball Stand Ø5.9mm	Flange M4 Lock Nut	Nylon Nut M2.5
R86379	**R86058**	**R86059**	**R86060**	**R86061**
1.5 Button Head 2*4mm	2.0 Button Head 3*6mm	2.0 Button Head 3*8mm	2.0 Button Head 3*10mm	2.0 Button Head 3*12mm

Spare Part

R86062	R86065	R86066	R86529	R86530
2.0 Button Head 3*14mm	2.0 Button Head 3*20mm	2.0 Button Head 3*25mm	1.5 Button Head Self-tapping 2*6mm	2.0 Step Screws 4*11.5mm
R86707	**R86071**	**R86531**	**R86532**	**R86694**
1.5 Cap Head 2*5mm(Black)	2.0 Cap Head 2.5*8mm	1.5 Cap Head Self-tapping 2*8mm	2.0 Flat Head 3*6mm	2.0 Flat Head 2*8mm
R86072	**R86163**	**R86533**	**R86537**	**R86534**
2.0 Flat Head 2.5*10mm	2.0 Flat Head 3*10mm	1.5 Crub Screw Bolt 3*18mm	Metal Washer(2.6*6*0.5)	O Ring2.8*1.9mm*8P O Ring2.8*2.0mm*8P O Ring10*1mm*4P
R86535	**R86536**	**R86321**	**R86569**	**R86539**
E-Clips-Ø2.5mm*6P E-Clips-Ø4mm*6P	Pin -2*10mm*6P Pin -2*11mm*6P Pin -2*12mm*6P	2.0 Flange Head Screws3*4	Wheel Hex	Dig Servo 9G /7.4V
R86899	**R86541**	**R86538**	**X8E(GS07)-150**	**X6DC**
Steering Servo 30KG	Servo Horn(25T)	Motor-550/8020	X6DC Radio/Receiver	Rexeiver
R86769	**R86900**	**R86508**	**R86901**	
Magnetic Adapter Cable	ESC -80A	4*4mm Pinion Gear(17T)	Hook Braket	

Upgradable Optionals

R86366	P860136	P860094
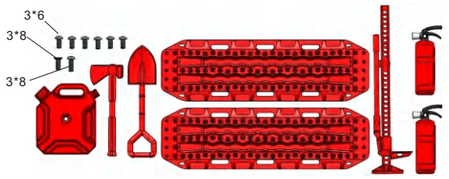	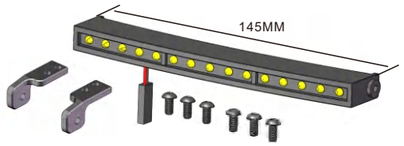 Adjustable LED Lamp	 Copper Wheel Weight Set 128g

P860087	P860091	P860092	P860065	P860066
(COPPER)  Transmission Housing Lid	(COPPER)  Front Gear Box Lid	(COPPER)  Rear Gear Box Lid	 Wheel (AL.)	 Wheel (AL.)

R86570	P860086	P860088	P860089	P860090
 Wheel Rim	(AL.)  Steering HubCarriers	(AL.)  Shock Plate(L/R)	(AL.) 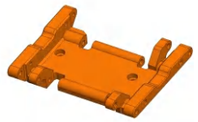 Chassis Mount	(AL.)  Differential Box

P860093	R86601	R86902		R86906
(AL.)  Motor Mount	 Antenna Pole	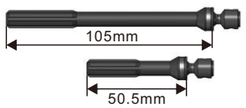	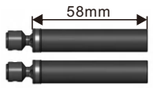 Drive Axle	 Branch-shaped Detach Line

R86513	R86571	R86632	R86787	R86873
 Crown Gear(64T)	 Crawler Battery (7.4V6200mAh/Plug:T)	 Crawler Battery (11.1V4000mAh/Plug:T)	 Fusion Brushless System 2-in-1(1800KV)	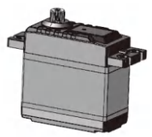 Steering Servo 35KG

PRODUCT QUALIFICATION CERTIFICATION

The product has conducted IQC (Input Quality Control) and full inspection before delivery. The manufacturer is responsible for quality assurance. Remote Control model is assembled manually, and then there may have some defects in the production process. Once the product is modified or incorrect operation, it cannot apply for replacement and return services, for the parts and accessories may be damaged.

Please contact the retail seller for after-sales service when needed.

The product conforms to technical requirements of export safety regulations.

Factory Address: Huang Jiang Town, Dong Guan City, Guang Dong Province, China

Website: www. RGT-RACING. Com

Production Date: refer to packing instruction